DIM.	TOL
L≤ 5	±0.2
5<L≤20	±0.3
20<L≤40	±0.4
40<L≤60	±0.5
60<L≤100	±0.8
ABOVE 100	±1.0

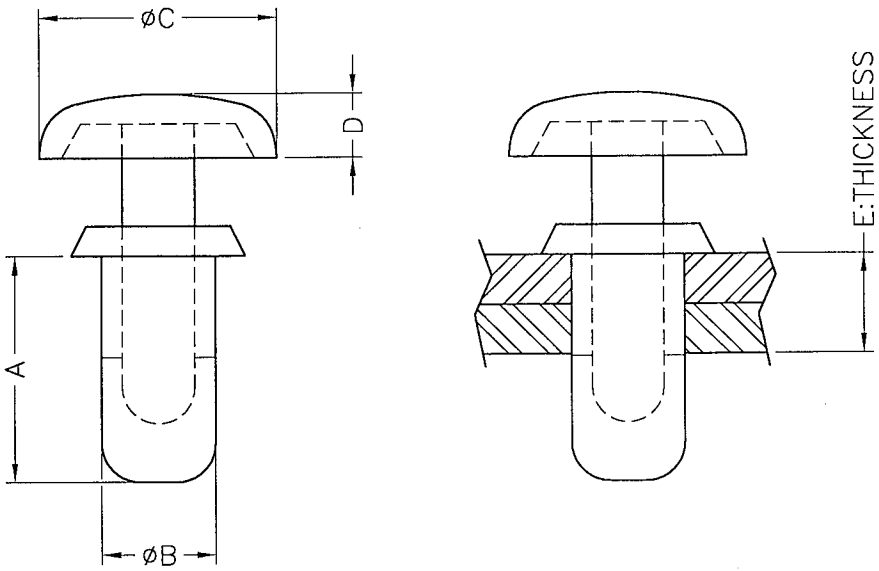

PART NO.	A	B	C	D	E	MOUNTING HOLE
SR2.6-3.2	3.2	2.6	5.0	1.7	1.0~2.0	2.6~2.7
SR2.6-4.2	4.2	2.6	5.0	1.7	2.0~3.0	
SR2.6-4.8	4.8	2.6	5.0	1.4	2.5~3.4	
SR2.6-5.5	5.5	2.6	5.0	1.4	3.0~4.3	
SR2.6-6.4	6.4	2.6	5.0	1.4	4.3~5.0	
SR2.6-7.2	7.2	2.6	5.0	1.4	5.0~5.8	
SR3-3.5	3.6	3.0	6.3	1.7	1.0~2.0	3.0~3.1
SR3-4.5	4.5	3.0	6.3	1.7	2.0~3.0	
SR3-5.5	5.5	3.0	6.3	1.7	3.0~3.5	
SR3-6	6.0	3.0	6.3	1.7	3.5~4.5	
SR3-6.5	6.5	3.0	6.3	1.7	4.0~4.5	
SR3-7.5	7.5	3.0	6.3	1.7	5.0~6.0	
SR3-8	8.1	3.0	6.3	1.7	5.5~6.5	
SR3-9	9.1	3.0	6.3	1.7	6.5~7.5	
SR3-10	10.0	3.0	6.3	1.7	7.5~8.5	
SR3-13	13.2	3.0	6.3	1.7	10.0~11.0	
SR3-15	15.5	3.0	6.2	1.7	11.5~13.0	
SR3-18.5	18.5	3.0	6.3	1.7	15.0~16.5	

NOTE: 1. SHRINKING IS NORMAL STATUS.
內縮為正常現象.
2. MADE OF EQUIVALENT MATERIAL.
均可使用同等材質.
3. THE COLOR BATCH TEST REPORT IS ONLY FOR FIRST LOT TEST.
色母環保檢測報告,僅提供原始測試報告.

KANG YANG
康揚企業股份有限公司
2025-11-14
工程部
R&D

康揚企業股份有限公司
KANG YANG HARDWARE ENTERPRISE CO., LTD.
康揚塑膠(東莞)有限公司
KANG YANG PLASTIC(DONG GUAN)CO.,LTD.
康哲電腦配件(吳江)有限公司
KANG CHE COMPUTER COMPONENTS(WUJIANG)CO.,LTD.
ISO 9001
ISO 14001
QC 080000
IATF 16949

PROPRIETARY AND CONFIDENTIAL
THE INFORMATION CONTAINED IN THIS DRAWING IS THE SOLE PROPERTY OF KANG YANG HARDWARE ENTERPRISE CO. ANY REPRODUCTION IN PART OR AS A WHOLE WITHOUT THE WRITTEN PERMISSION OF KANG YANG HARDWARE ENTERPRISE CO. IS PROHIBITED.

DO NOT SCALE DRAWING

DATE 2003.09.02	TITLE SNAP RIVET	DWG. NO. SR-H	PART NO. SEE ABOVE
DRAWN Linda	MATERIAL NYLON 66 UL94V-2		
CHECKED Yuping	COLOR BLACK / FINISH	SIZE A4	SPEC. DWG. / REV N
APPROVED Kang	UNLESS OTHERWISE SPECIFIED TOLERANCE: SEE ABOVE	SCALE: NONE / UNIT mm	SHEET 1 OF 2

DIM.	TOL
L≤ 5	±0.2
5<L≤20	±0.3
20<L≤40	±0.4
40<L≤60	±0.5
60<L≤100	±0.8
ABOVE 100	±1.0

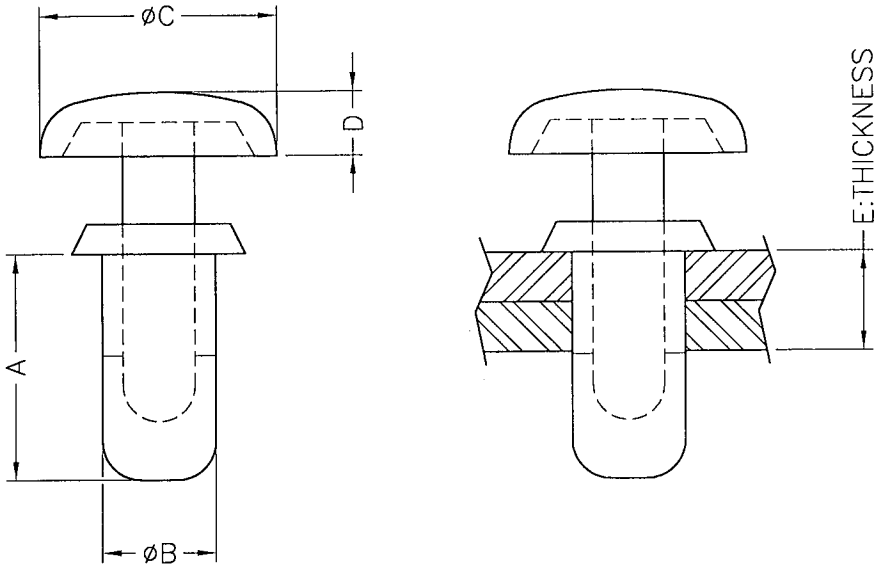

PART NO.	A	B	C	D	E	MOUNTING HOLE
SR3.5-3.5	3.5	3.5	6.3	1.7	1.5~2.0	3.5~3.6
SR3.5-4.5	4.5	3.5	6.3	1.7	2.0~3.0	
SR3.5-5	5.0	3.5	6.3	1.7	2.5~3.5	
SR3.5-5.5	5.5	3.5	6.3	1.7	3.0~4.0	
SR3.5-6	6.0	3.5	6.3	1.7	3.0~4.0	
SR3.5-7	7.0	3.5	6.3	1.7	4.5~5.5	
SR4-4.6	4.6	4.0	7.8	1.9	2.5~3.5	4.0~4.1
SR4-5	5.0	4.0	7.8	1.9	2.5~3.5	
SR4-6	6.1	4.0	7.8	1.9	3.5~4.5	
SR4-7	7.1	4.0	8.0	2.0	4.5~5.5	
SR4-8	8.1	4.0	8.0	2.0	5.5~6.5	
SR4-9	9.0	4.0	8.0	2.0	6.5~7.5	
SR4-10	10.0	4.0	8.0	2.0	7.5~8.5	
SR4-12	12.0	4.0	8.0	2.0	9.5~10.5	
SR4-15L	15.0	4.0	8.0	2.0	11.0~13.0	
SR4-25	24.5	4.0	8.0	2.0	22~23	
SR5-4.5	4.6	5.0	8.9	2.2	1.5~2.5	5.0~5.1
SR5-5.5	5.5	5.0	8.9	2.0	2.5~3.5	
SR5-6.5	6.5	5.0	8.9	2.2	3.5~4.5	
SR5-7.5	7.5	5.0	8.9	2.2	4.5~5.5	
SR5-8.5	8.4	5.0	8.9	2.2	5.5~6.5	
SR5-9.5	9.5	5.0	8.9	2.1	5.5~7.5	
SR5-10.5	10.5	5.0	8.9	2.1	6.5~8.5	
SR6-6	6.0	6.0	12.0	2.5	2.5~4.0	6.0~6.1

NOTE: 1. SHRINKING IS NORMAL STATUS.
內縮為正常現象.
2. MADE OF EQUIVALENT MATERIAL.
均可使用同等材質.
3. THE COLOR BATCH TEST REPORT IS ONLY FOR FIRST LOT TEST.
色母環保檢測報告,僅提供原始測試報告.

KANG YANG
康揚企業股份有限公司
2025-11-14
工程部
R&D

康揚企業股份有限公司
KANG YANG HARDWARE ENTERPRISE CO., LTD.
康揚塑膠(東莞)有限公司
KANG YANG PLASTIC(DONG GUAN)CO.,LTD.
康哲電腦配件(吳江)有限公司
KANG CHE COMPUTER COMPONENTS(WUJIANG)CO.,LTD.
ISO 9001
ISO 14001
QC 080000
IATF 16949

PROPRIETARY AND CONFIDENTIAL
THE INFORMATION CONTAINED IN THIS DRAWING IS THE SOLE PROPERTY OF KANG YANG HARDWARE ENTERPRISE CO. ANY REPRODUCTION IN PART OR AS A WHOLE WITHOUT THE WRITTEN PERMISSION OF KANG YANG HARDWARE ENTERPRISE CO. IS PROHIBITED.

DO NOT SCALE DRAWING

DATE 2003.09.02	TITLE SNAP RIVET	DWG. NO. SR-H	PART NO. SEE ABOVE
DRAWN Linda	MATERIAL NYLON 66 UL94V-2		
CHECKED Yuping	COLOR BLACK / FINISH	SIZE A4	SPEC. DWG. / REV N
APPROVED Kang	UNLESS OTHERWISE SPECIFIED TOLERANCE: SEE ABOVE	SCALE: NONE / UNIT mm	SHEET 2 OF 2