REVISIONS			
REV	DESCRIPTION	DATE	BY

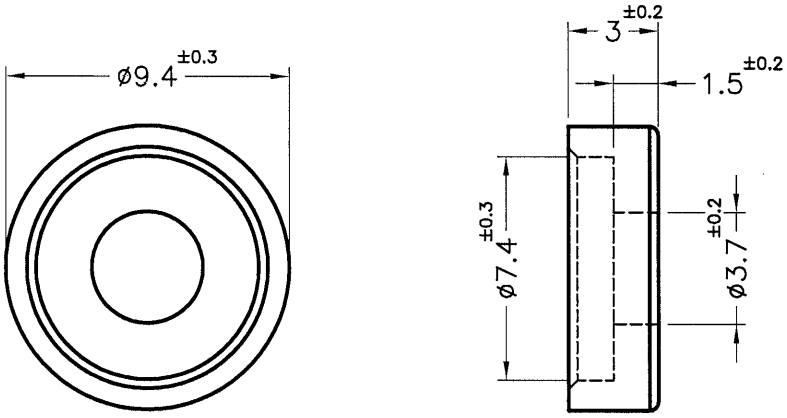

PART NO.	MATERIAL	COLOR
U-8	NYLON 66 UL94V-2	NATURAL
U-8V0	NYLON 66 UL94V-0	NATURAL(WHITE)

KANG YANG
康揚企業股份有限公司
2025-09-26
工程部
R&D

NOTE:MADE OF EQUIVALENT MATERIAL.
可使用同等材質.

康揚企業股份有限公司
KANG YANG HARDWARE ENTERPRISE CO., LTD.
康揚塑膠(東莞)有限公司
KANG YANG PLASTIC(DONG GUAN)CO.,LTD.
康哲電腦配件(吳江)有限公司
KANG CHE COMPUTER COMPONENTS(WUJIANG) CO.,LTD.
ISO 9001
ISO 14001
QC 080000

TITLE: SPACER SUPPORT			SPEC. DWG
MATERIAL: SEE ABOVE			DATE: 2001.06.28
FINISH:			DRAWN: JASON
COLOR: SEE ABOVE			CHECK: Will
UNLESS OTHERWISE SPECIFIED TOLERANCE: SEE ABOVE			APPROVED: Kang
PART NUMBER: SEE ABOVE	DRAWING NUMBER: U-8		
SIZE: A4	SCALE: 4:1	UNIT: mm	REV: B