REVISIONS			
REV	DESCRIPTION	DATE	BY

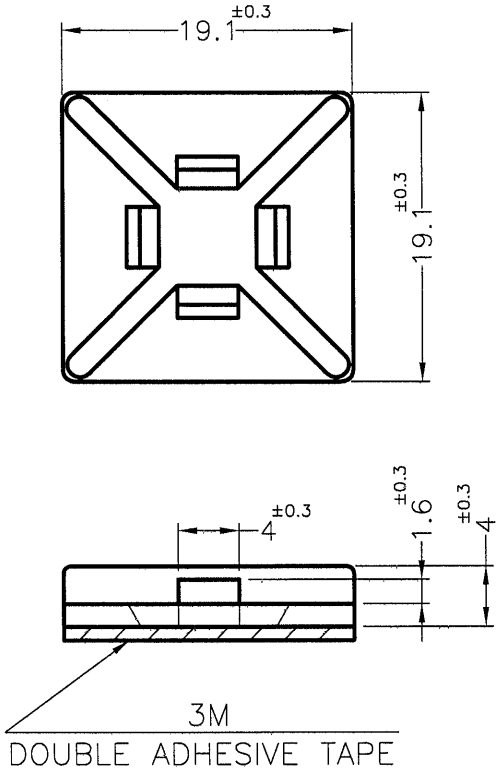

PART NO.	DOUBLE ADHESIVE TAPE	COLOR
CM-19(3M)	THICKNESS=0.9mm	NATURAL
CM-19B	THICKNESS=1.1mm	BLACK
CM-19B(3M)	THICKNESS=0.9mm	

NOTE: 1. THE PRODUCT SIZE IS NOT INCLUDED THE SIZES OF ADHESIVE TAPE AND ITS LINER.
產品尺寸皆不含背膠及離型紙.
2. IT IS HAND-CUT ADHESIVE TAPE, SO CAN NOT PERFECTLY STICK EVENLY. IT IS POSSIBLE TO HAVE SOME PORTION EXPOSED OR SHIRNKING INWARD. THIS IS A NORMAL PHENOMENON.
此為手工背膠,貼附無法非常平整,會有外露或內縮屬正常現象.
3. THE PRODUCT SHRINKING IS NORMAL STATUS.
產品內縮為正常現象.
4. MADE OF EQUIVALENT MATERIAL.
均可使用同等材質.

KANG YANG
康揚企業股份有限公司
2025-09-26
工程部
R&D

康揚企業股份有限公司
KANG YANG HARDWARE ENTERPRISE CO., LTD.
康揚塑膠(東莞)有限公司
KANG YANG PLASTIC(DONG GUAN)CO.,LTD.
康哲電腦配件(吳江)有限公司
KANG CHE COMPUTER COMPONENTS(WUJIANG) CO.,LTD.
ISO 9001
ISO 14001
QC 080000

TITLE: CABLE TIE MOUNT			SPEC. DWG
MATERIAL: NYLON 66 UL94V-2			DATE: 2000.11.27
FINISH:			DRAWN: JASON
COLOR: SEE ABOVE			CHECK: 朱益定
UNLESS OTHERWISE SPECIFIED TOLERANCE: SEE ABOVE			APPROVED: Kang
PART NUMBER: SEE ABOVE	DRAWING NUMBER: CM-19		
SIZE: A4	SCALE: 2:1	UNIT: mm	REV: F