THIS DRAWING IS UNPUBLISHED. RELEASED FOR PUBLICATION 2007
© COPYRIGHT 2007 BY - ALL RIGHTS RESERVED.

REVISIONS

P	LTR	DESCRIPTION	DATE	DWN	APVD
	B1	REVISED PER ECO-17-009774	06SEP2017	M.G.	M.G.
	B2	REVISED PER ECO-19-004916	29MAR2019	AP	VN

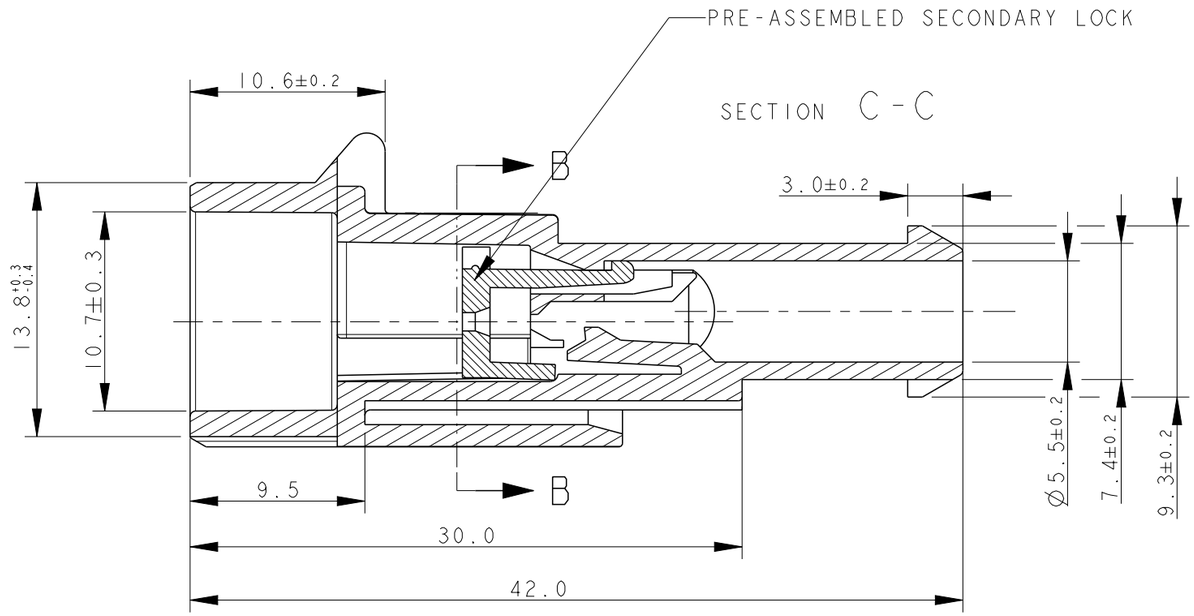

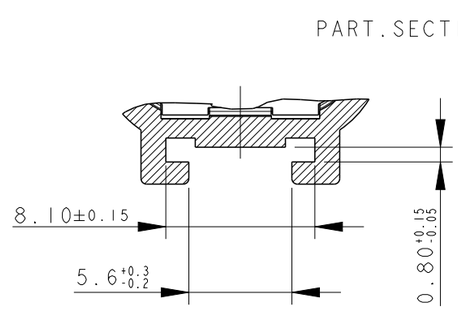

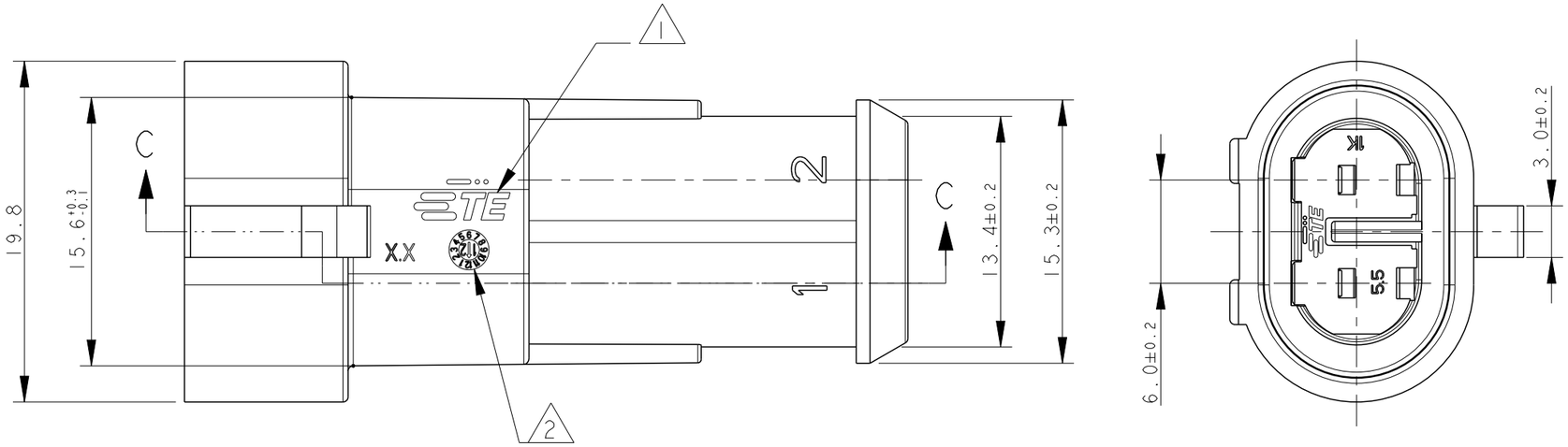

HSG:WHITE SEC.LOCK: WHITE	PA66-GF UL94-V2 ACC.TO IEC 60335-1	A	1745099-1
HSG:GREEN SEC.LOCK: RED	PA66-GF	B	282104-3
HSG:GRAY SEC.LOCK: RED	PA66-GF	B	282104-2
HSG:BLACK SEC.LOCK: RED	PA66-GF	B	282104-1
FINISH/COLOR	MATERIAL	REV	P/N

1 TE CONNECTIVITY TRADE MARK, (IN ALTERNATIVE: "AMP" LOGO, OR "Tyco Electronics" LOGO)

2 DATE CODE (OPTIONAL IN OLD MOULDS)

THIS DRAWING IS A CONTROLLED DOCUMENT.

DIMENSIONS: mm

TOLERANCES UNLESS OTHERWISE SPECIFIED:
0 PLC ±-
1 PLC ± 0.3
2 PLC ±-
3 PLC ±-
4 PLC ±-
ANGLES ± 2°

MATERIAL - SEE TABLE

FINISH - SEE TABLE

DWN C. BERTINI 02-1990
CHK A.BRUNI 02-1990
APVD - -
PRODUCT SPEC 108-20090
APPLICATION SPEC 412-20000
WEIGHT 3.72g

TE Connectivity

NAME AMP SUPERSEAL 1.5 SRS. 2 POSITIONS TAB ASS'Y -

SIZE	CAGE CODE	DRAWING NO	RESTRICTED TO
A3	00779	C-282104	-

Customer Drawing | SCALE 3:1 | SHEET 1 OF 1 | REV B2

1470-19 (3/13)