THIS DRAWING IS UNPUBLISHED. RELEASED FOR PUBLICATION 2009
© COPYRIGHT 2009 BY - ALL RIGHTS RESERVED.

REVISIONS

P	LTR	DESCRIPTION	DATE	DWN	APVD
	B3	REVISED (ECO-17-009774)	06SEP2017	M.G.	M.G.
	B4	REVISED PER ECO-20-002019	12FEB2020	AP	VN
	B5	REVISED PER ECN-21-110072	21JUL2021	AP	VN

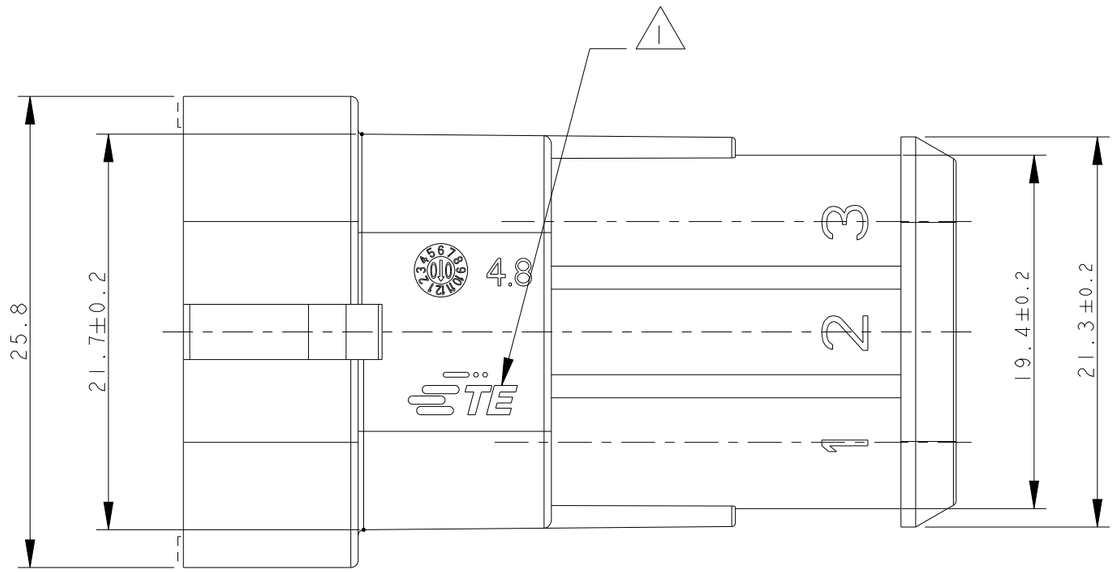

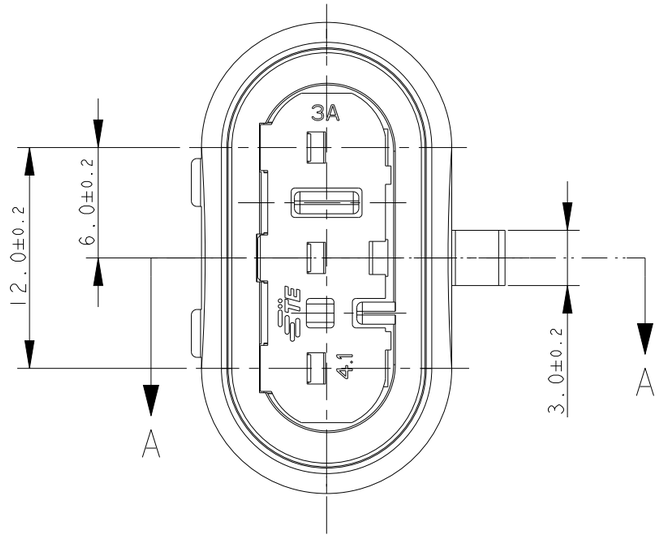

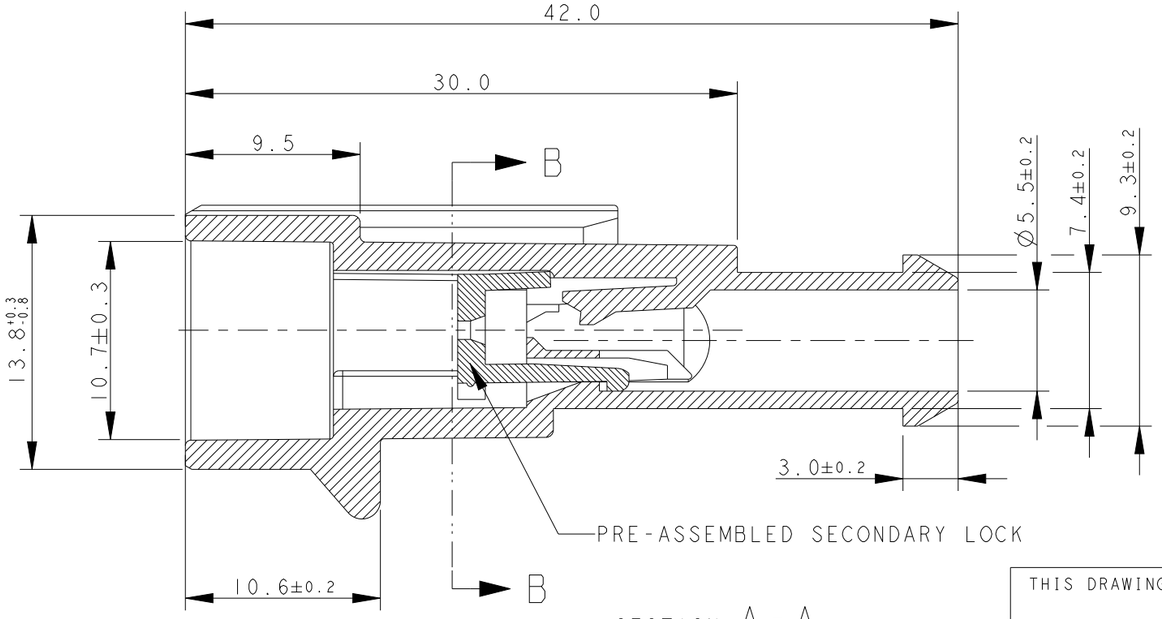

SECTION A-A

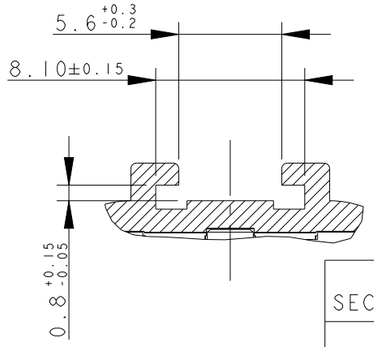

PART.SECTION B-B

HSG:WHITE SEC.LOCK: WHITE	PA66-GF UL94-V2 ACC.TO IEC 60335-1	A	1745082-1
HSG:BROWN SEC.LOCK: RED	PA66-GF	B	4-282105-1
HSG:GRAY SEC.LOCK: RED	PA66-GF	B	282105-2
HSG:BLACK SEC.LOCK: RED	PA66-GF	B	282105-1
FINISH/COLOR	MATERIAL	REV	PART NUMBER

1 TE CONNECTIVITY TRADE MARK,
(IN ALTERNATIVE: "AMP" LOGO, OR "Tyco Electronics" LOGO)

THIS DRAWING IS A CONTROLLED DOCUMENT.

DIMENSIONS: mm

TOLERANCES UNLESS OTHERWISE SPECIFIED:
0 PLC ±-
1 PLC ± 0.3
2 PLC ±-
3 PLC ±-
4 PLC ±-
ANGLES ± 2°

MATERIAL - SEE TABLE

FINISH - SEE TABLE

DWN C. BERTINI 02-1990
CHK A.BRUNI 02-1990
APVD - -
PRODUCT SPEC 108-20090
APPLICATION SPEC 412-20000
WEIGHT 5.14g

TE Connectivity

NAME
AMP SUPERSEAL 1.5 SRS. CONNECTORS
3 POSITIONS TAB ASS'Y
-

SIZE	CAGE CODE	DRAWING NO	RESTRICTED TO
A3	00779	C-282105	

CUSTOMER DRAWING | SCALE 3:1 | SHEET 1 OF 2 | REV B5

1470-19 (3/13)

THIS DRAWING IS UNPUBLISHED. RELEASED FOR PUBLICATION 2009
© COPYRIGHT 2009 BY - ALL RIGHTS RESERVED.

REVISIONS

P	LTR	DESCRIPTION	DATE	DWN	APVD
	-	SEE SHEET 1	-	-	-

REFER SHEET 1 FOR MISSING DIMENSIONS

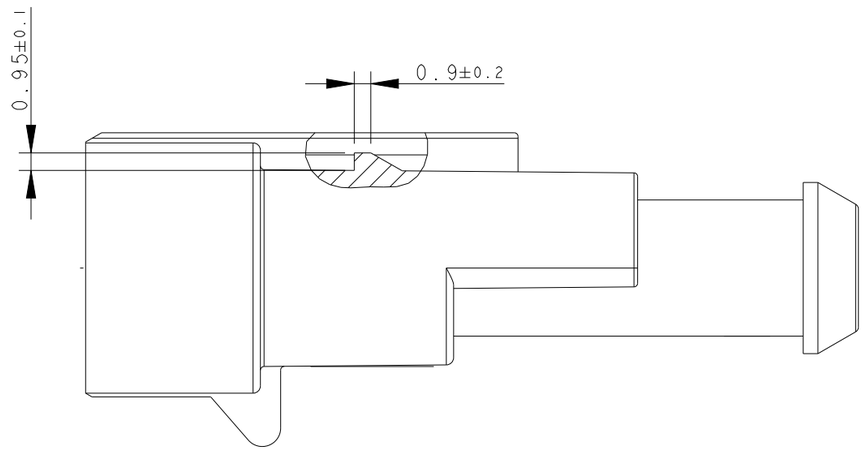

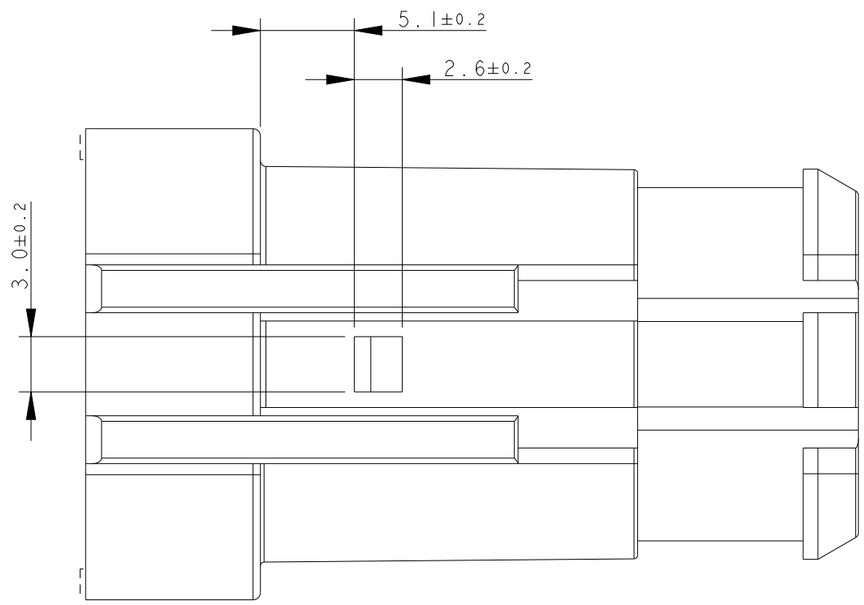

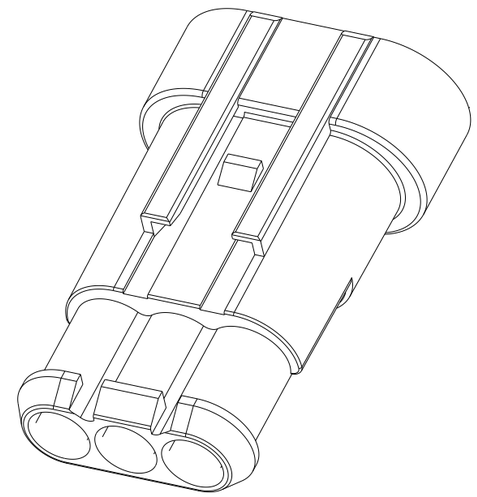

4-282105-1 AS SHOWN

THIS DRAWING IS A CONTROLLED DOCUMENT.

DIMENSIONS: mm

TOLERANCES UNLESS OTHERWISE SPECIFIED:
0 PLC ±-
1 PLC ± 0.3
2 PLC ±-
3 PLC ±-
4 PLC ±-
ANGLES ± 2°

MATERIAL - SEE TABLE

FINISH - SEE TABLE

DWN C. BERTINI 02-1990
CHK A.BRUNI 02-1990
APVD - -
PRODUCT SPEC 108-20090
APPLICATION SPEC 412-20000
WEIGHT 5.14g

TE Connectivity

NAME AMP SUPERSEAL 1.5 SRS. CONNECTORS 3 POSITIONS TAB ASS'Y -

SIZE	CAGE CODE	DRAWING NO	RESTRICTED TO
A3	00779	C-282105	

CUSTOMER DRAWING | SCALE 3:1 | SHEET 2 OF 2 | REV B5

1470-19 (3/13)