·M·C·C·

Micro Commercial Components
21201 Itasca Street Chatsworth
CA 91311
Phone: (818) 701-4933
Fax: (818) 701-4939

MBR0520 THRU MBR05100

0.5 Amp Schottky Rectifier 20 to 100 Volts

Features

- High Current Capability
- Extremely Low Thermal Resistance
- For Surface Mount Application
- Higher Temp Soldering: 250°C for 10 Seconds At Terminals
- Low Forward Voltage

Maximum Ratings

- Operating Temperature: -55°C to +150°C
- Storage Temperature: -55°C to +150°C
- Maximum Thermal Resistance: 5°C/W Junction to Lead

MCC Catalog Number	Device Marking	Maximum Recurrent Peak Reverse Voltage	Maximum RMS Voltage	Maximum DC Blocking Voltage
MBR0520	R2	20V	14V	20V
MBR0530	R3	30V	21V	30V
MBR0540	R4	40V	28V	40V
MBR0560	R6	60V	42V	60V
MBR0580	R8	80V	56V	80V
MBR05100	RA	100V	70V	100V

Electrical Characteristics @ 25°C Unless Otherwise Specified

Average Forward Current	$I_{F(AV)}$	0.5A	T_J=115°C
Peak Forward Surge Current	I_{FSM}	5.5A	8.3ms half sine
Maximum Instantaneous Forward Voltage MBR0520 MBR0530 MBR0540 MBR0560 MBR0580-05100	V_F	0.45V 0.55V 0.55V 0.70V 0.80V	I_{FM}=0.5A T_A=25°C
Maximum DC Reverse Current At Rated DC Blocking Voltage	I_R	0.2mA	T_J=25°C
Typical Junction Capacitance	C_J	30pF	Measured at 1.0MHz, V_R=4.0 V

SOD123

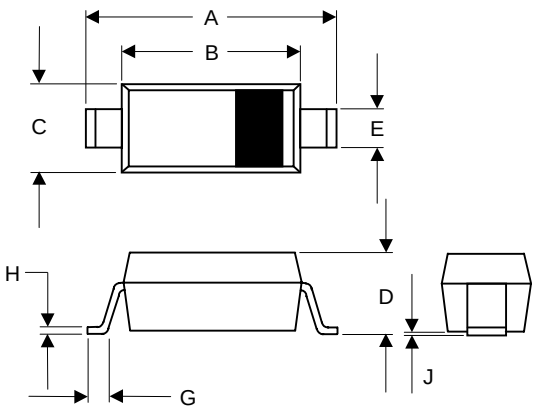

DIMENSIONS					
DIM	INCHES		MM		NOTE
	MIN	MAX	MIN	MAX	
A	.140	.152	3.55	3.85	
B	.100	.112	2.55	2.85	
C	.055	.071	1.40	1.80	
D	-----	.053	-----	1.35	
E	.012	.031	0.30	.78	
G	.006	-----	0.15	-----	
H	-----	.01	-----	.25	
J	-----	.006	-----	.15	

SUGGESTED SOLDER PAD LAYOUT

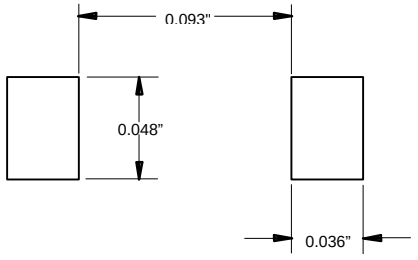

Figure 3
Forward Derating Curve

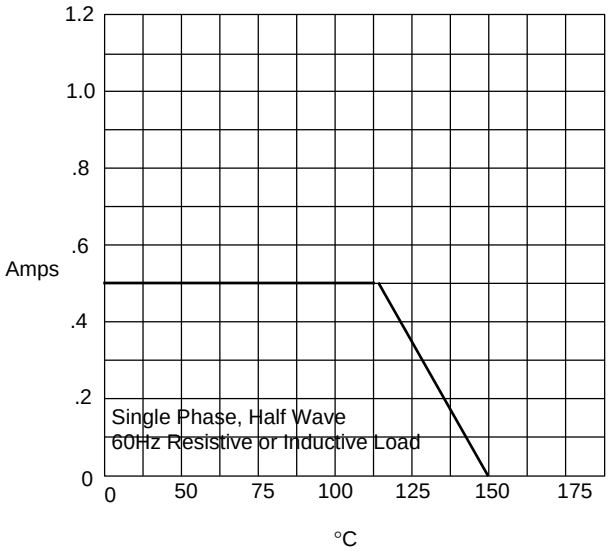

Average Forward Rectified Current - Amperes *versus*
Ambient Temperature -°C

Figure 4
Peak Forward Surge Current

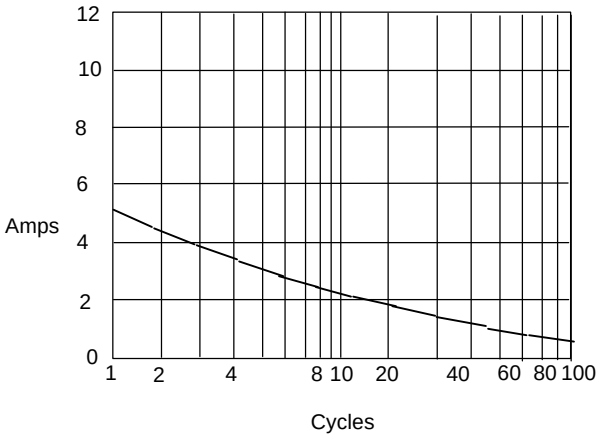

Peak Forward Surge Current - Amperes *versus*
Number Of Cycles At 60Hz - Cycles