Micro Commercial Components
21201 Itasca Street Chatsworth
CA 91311
Phone: (818) 701-4933
Fax: (818) 701-4939

MBRX0520 THRU MBRX05100

0.5 Amp

Schottky Rectifier

20 to 100 Volts

Features

- High Current Capability
- Extremely Low Thermal Resistance
- For Surface Mount Application
- Higher Temp Soldering: 250°C for 10 Seconds At Terminals
- Low Forward Voltage

Maximum Ratings

- Operating Temperature: -55°C to +125°C
- Storage Temperature: -55°C to +150°C
- Maximum Thermal Resistance: 5°C/W Junction to Lead

MCC Catalog Number	Device Marking	Maximum Recurrent Peak Reverse Voltage	Maximum RMS Voltage	Maximum DC Blocking Voltage
MBRX0520	------	20V	14V	20V
MBRX0530	------	30V	21V	30V
MBRX0540	------	40V	28V	40V
MBRX0560	------	60V	42V	60V
MBRX0580	------	80V	56V	80V
MBRX05100	------	100V	70V	100V

Electrical Characteristics @ 25°C Unless Otherwise Specified

Average Forward Current	$I_{F(AV)}$	0.5A	T_J=90°C
Peak Forward Surge Current	I_{FSM}	20A	8.3ms half sine
Maximum Instantaneous Forward Voltage MBRX0520 MBRX0530 MBRX0540 MBRX0560 MBRX0580-05100	V_F	 0.45V 0.55V 0.55V 0.70V 0.80V	I_{FM}=0.5A T_J=25°C
Maximum DC Reverse Current At Rated DC Blocking Voltage	I_R	0.3mA	T_A=25°C
Typical Junction Capacitance	C_J	30pF	Measured at 1.0MHz, V_R=4.0V

SOD323

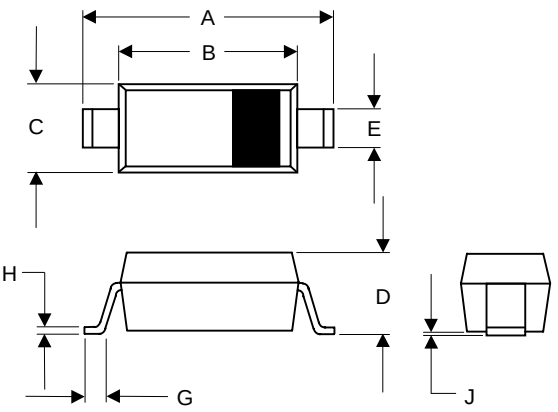

DIMENSIONS					
DIM	INCHES		MM		NOTE
	MIN	MAX	MIN	MAX	
A	.090	.107	2.30	2.70	
B	.063	.071	1.60	1.80	
C	.045	.053	1.15	1.35	
D	.031	.045	0.80	1.15	
E	.010	.016	0.25	0.40	
G	.004	.018	0.10	0.45	
H	.004	.010	0.10	0.25	
J	-----	.006	-----	0.15	

SUGGESTED SOLDER PAD LAYOUT

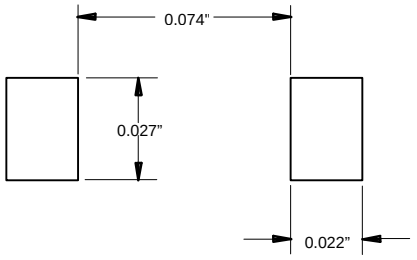

Figure 1
Typical Forward Characteristics

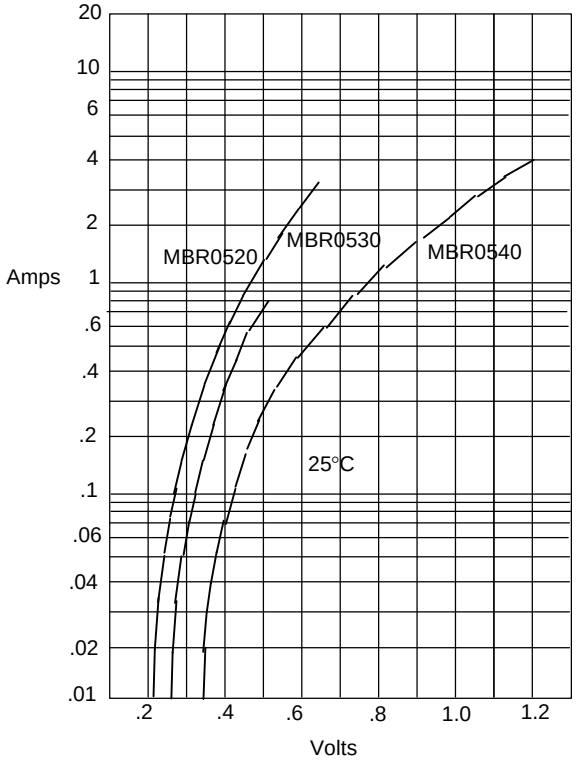

Instantaneous Forward Current - Amperes *versus*
Instantaneous Forward Voltage - Volts

Figure 2
Junction Capacitance

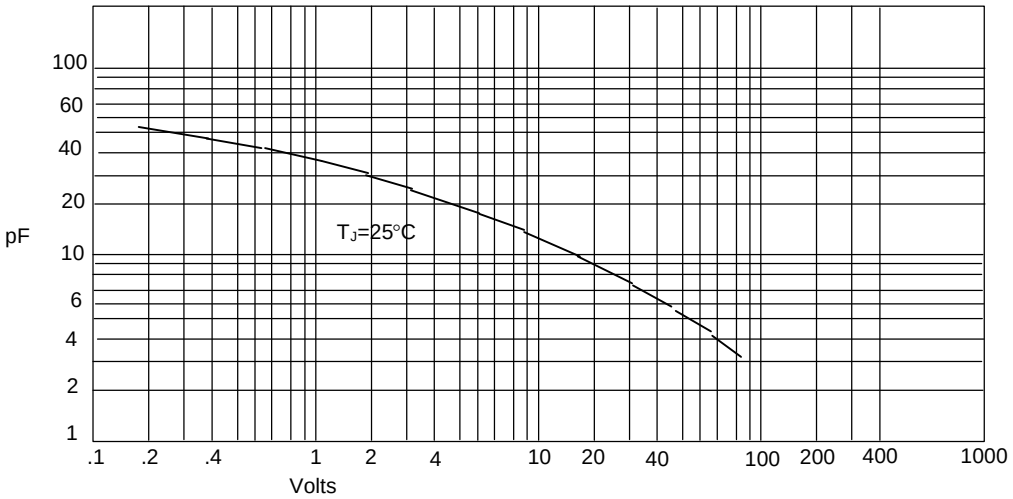

Figure 3
Forward Derating Curve

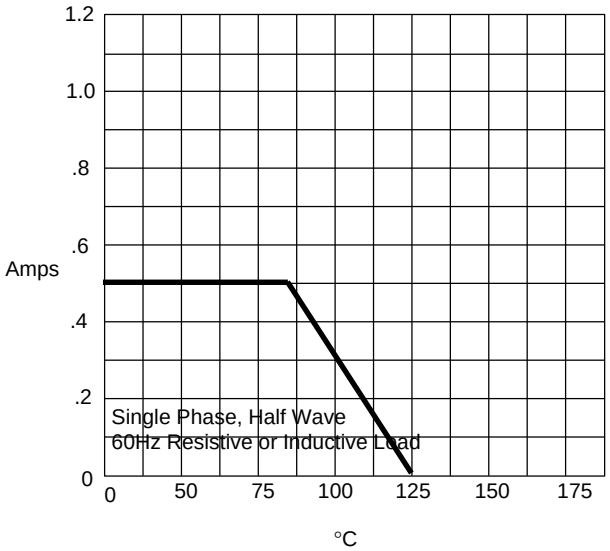

Average Forward Rectified Current - Amperes *versus* Ambient Temperature -°C

Figure 4
Peak Forward Surge Current

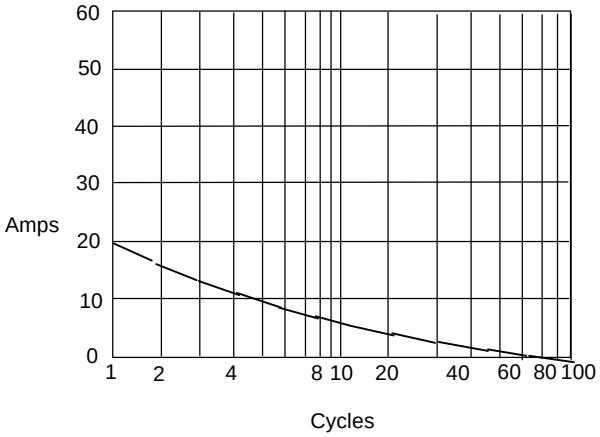

Peak Forward Surge Current - Amperes *versus* Number Of Cycles At 60Hz - Cycles