THIS DRAWING IS UNPUBLISHED. RELEASED FOR PUBLICATION 20
© COPYRIGHT 20 BY - ALL RIGHTS RESERVED.

REVISIONS

P	LTR	DESCRIPTION	DATE	DWN	APVD
	C3	REVISED PER ECO-17-009774	06SEP2017	M.G.	M.G.

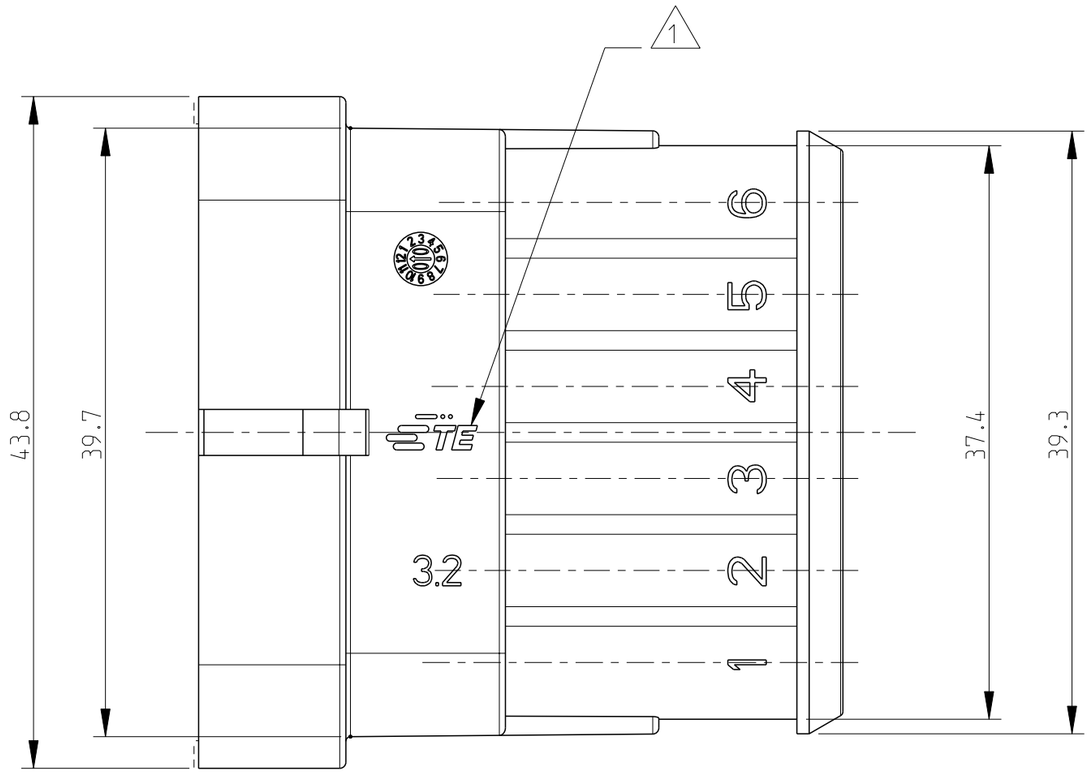

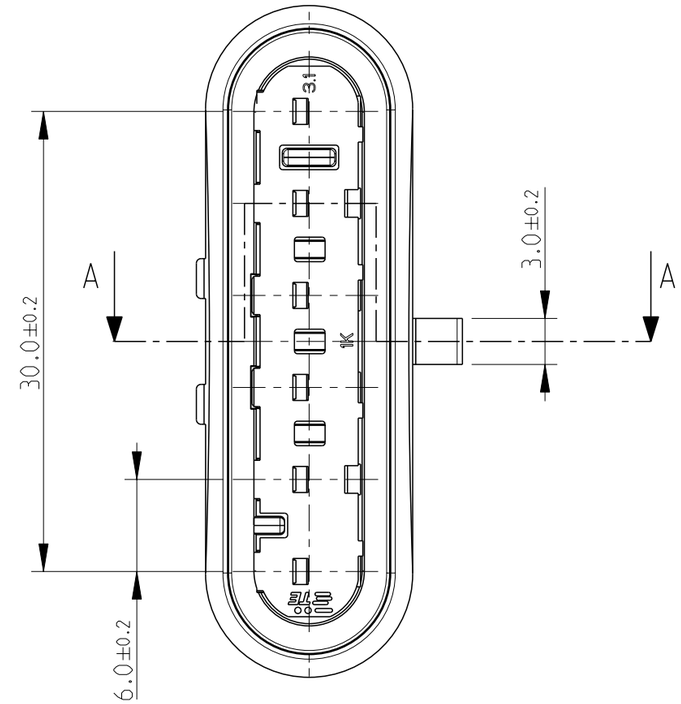

SECTION A-A

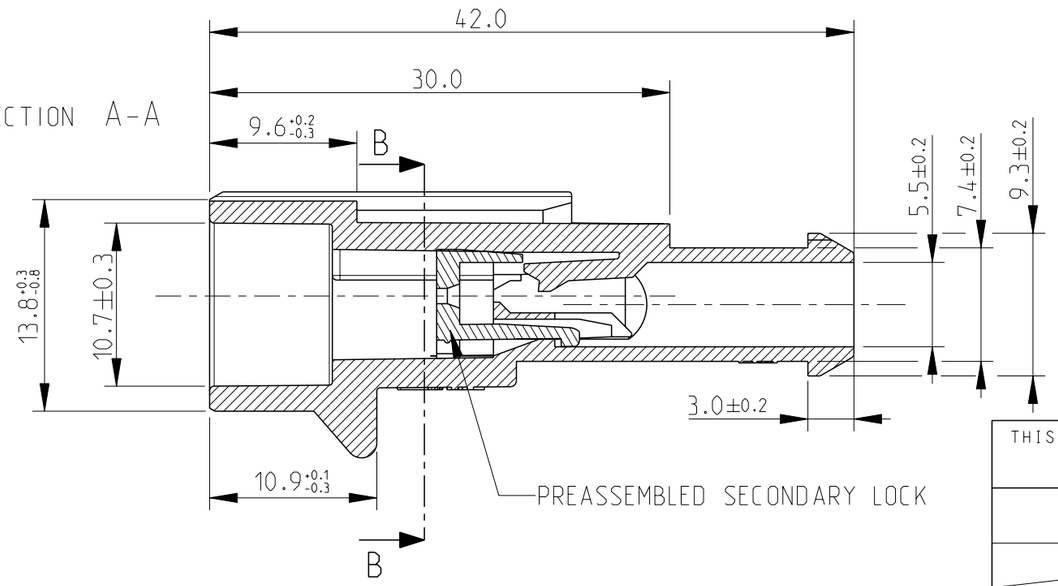

PART. SECTION B-B

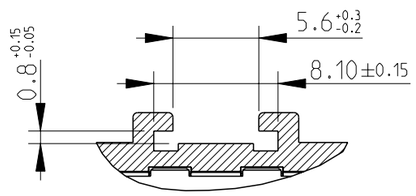

HSG:WHITE SEC.LOCK: WHITE	PA66-GF UL94-V2 ACC.TO IEC 60335-1	A	1745084-1
HSG:GRAY SEC.LOCK: RED	PA66-GF	C	282108-2
HSG:BLACK SEC.LOCK: RED	PA66-GF	C	282108-1
FINISH/COLOR	MATERIAL	REV	PART NUMBER

⚠ TE CONNECTIVITY TRADE MARK,
(IN ALTERNATIVE: " AMP " LOGO, OR " Tyco Electronics " LOGO)

THIS DRAWING IS A CONTROLLED DOCUMENT.

DIMENSIONS: mm

TOLERANCES UNLESS OTHERWISE SPECIFIED:
0 PLC ±-
1 PLC ± 0.3
2 PLC ±-
3 PLC ±-
4 PLC ±-
ANGLES ± 2°

MATERIAL - SEE TABLE

FINISH - SEE TABLE

DWN C.BERTINI 02-1990
CHK A. BRUNI 02-1990
APVD - -
PRODUCT SPEC 108-20090
APPLICATION SPEC 412-20000
WEIGHT 8.9g

TE Connectivity

NAME AMP SUPERSEAL 1.5 SRS.
6 POSITIONS TAB ASS'Y
-

SIZE	CAGE CODE	DRAWING NO	RESTRICTED TO
A3	-	C-282108	-

CUSTOMER DRAWING | SCALE 5:2 | SHEET 1 OF 1 | REV C3