THIS DRAWING IS UNPUBLISHED. RELEASED FOR PUBLICATION AUG ,2006.
© COPYRIGHT – BY TYCO ELECTRONICS CORPORATION. ALL RIGHTS RESERVED.

LOC	DIST
DW	—

REVISIONS

P	LTR	DESCRIPTION	DATE	DWN	APVD
	C	REVISED (ECR-13-003844)	04JUN13	JL	WK

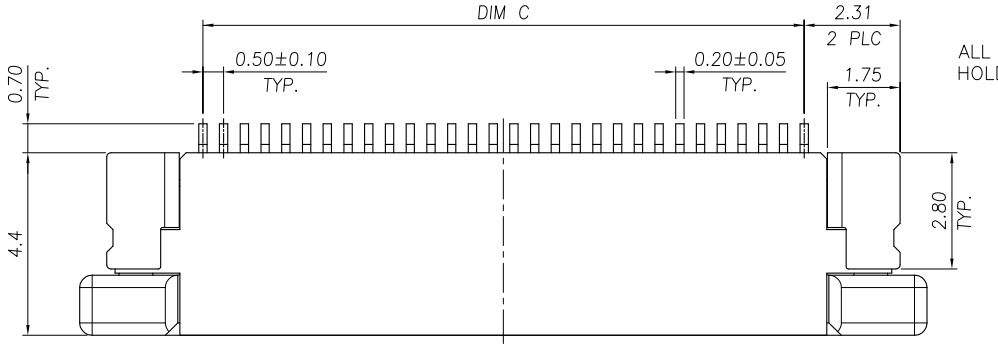

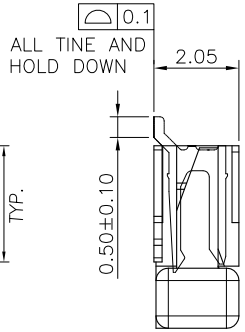

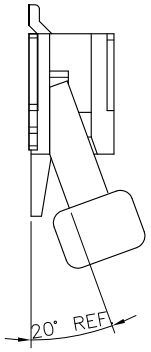

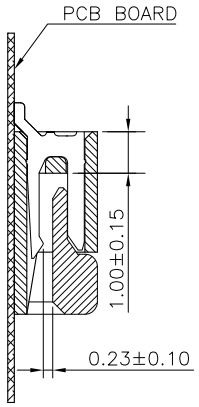

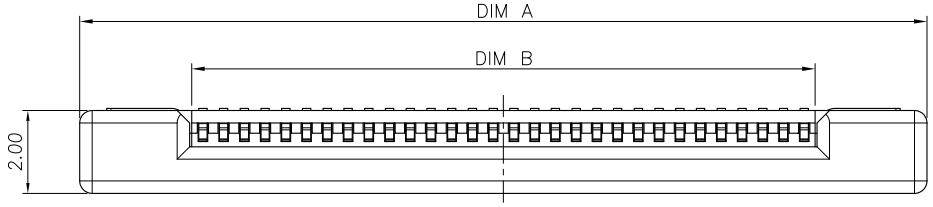

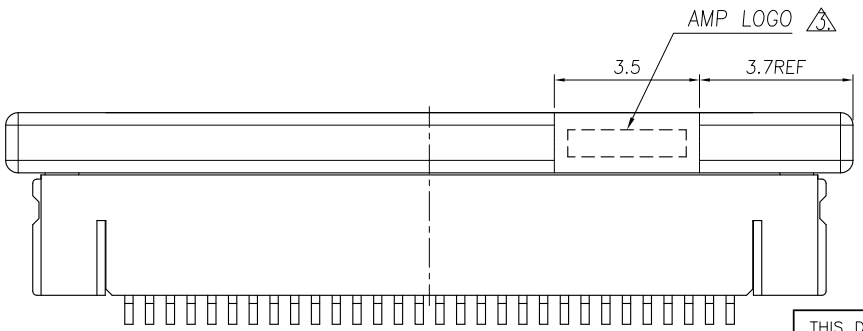

NOTE:

1. MATERIAL:
   HOUSING: THERMOPLASTIC(LCP), UL 94V-0, COLOR: NATURE.
   ACTUATOR: THERMOPLASTIC, UL 94 V-0, COLOR: IVORY.
   HOLD DOWN: PHOSPHOR BRONZE.
   CONTACT: PHOSPHOR BRONZE.
2. FINISH:
   CONTACT: GOLD FLASH OVER ALL, 50u" MIN. NICKEL UNDERPLATED ALL OVER.
   HOLD DOWN: 100u" MIN. BRIGHT TIN PLATING OVER, 50u" MIN. NICKEL UNDERPLATED ALL OVER.

3 WITHOUT AMP LOGO FOR 12 POSITION UNDER

C	B	A	POS.	PART NUMBER
24.50	25.60	30.43	50	5-1734592-0
24.00	25.10	29.93	49	4-1734592-9
23.50	24.60	29.43	48	4-1734592-8
23.00	24.10	28.93	47	4-1734592-7
22.50	23.60	28.43	46	4-1734592-6
22.00	23.10	27.63	45	4-1734592-5
21.50	22.60	27.43	44	4-1734592-4
21.00	22.10	26.93	43	4-1734592-3
20.50	21.60	26.43	42	4-1734592-2
20.00	21.10	25.93	41	4-1734592-1
19.50	20.60	25.43	40	4-1734592-0
19.00	20.10	24.93	39	3-1734592-9
18.50	19.60	24.43	38	3-1734592-8
18.00	19.10	23.93	37	3-1734592-7
17.50	18.60	23.43	36	3-1734592-6
17.00	18.10	22.93	35	3-1734592-5
16.50	17.60	22.43	34	3-1734592-4
16.00	17.10	21.93	33	3-1734592-3
15.50	16.60	21.43	32	3-1734592-2
15.00	16.10	20.93	31	3-1734592-1
14.50	15.60	20.43	30	3-1734592-0
14.00	15.10	19.93	29	2-1734592-9
13.50	14.60	19.43	28	2-1734592-8
13.00	14.10	18.93	27	2-1734592-7
12.50	13.60	18.43	26	2-1734592-6
12.00	13.10	17.93	25	2-1734592-5
11.50	12.60	17.43	24	2-1734592-4
11.00	12.10	16.93	23	2-1734592-3
10.50	11.60	16.43	22	2-1734592-2
10.00	11.10	15.93	21	2-1734592-1
9.50	10.60	15.43	20	2-1734592-0
9.00	10.10	14.93	19	1-1734592-9
8.50	9.60	14.43	18	1-1734592-8
8.00	9.10	13.93	17	1-1734592-7
7.50	8.60	13.43	16	1-1734592-6
7.00	8.10	12.93	15	1-1734592-5
6.50	7.60	12.43	14	1-1734592-4
6.00	7.10	11.93	13	1-1734592-3
5.50	6.60	11.43	12	1-1734592-2
5.00	6.10	10.93	11	1-1734592-1
4.50	5.60	10.43	10	1-1734592-0
4.00	5.10	9.93	09	0-1734592-9
3.50	4.60	9.43	08	0-1734592-8
3.00	4.10	8.93	07	0-1734592-7
2.50	3.60	8.43	06	0-1734592-6
2.00	3.10	7.93	05	0-1734592-5

DIMENSIONS

THIS DRAWING IS A CONTROLLED DOCUMENT.

DIMENSIONS: MM

TOLERANCES UNLESS OTHERWISE SPECIFIED:

0 PLC	± –
1 PLC	± 0.35
2 PLC	± 0.25
3 PLC	± –
4 PLC	± –
ANGLES	± 3°

MATERIAL: SEE NOTE

FINISH: SEE NOTE

DWN	J. LAI	15APR2009
CHK	S. CHIEN	15APR2009
APVD	W. KODAMA	15APR2009

PRODUCT SPEC: 108-57523

QUALIFICATION TEST REPORT: 501-57598

WEIGHT: – GRAMS

TE Connectivity

NAME: FPC CONNECTOR, 0.5mm PITCH, BOTTOM CONTACT, SMT TYPE.

SIZE	CAGE CODE	DRAWING NO	RESTRICTED TO
A3	00779	C-1734592	—

CUSTOMER DRAWING

SCALE — SHEET 1 OF 3 REV C

THIS DRAWING IS UNPUBLISHED. RELEASED FOR PUBLICATION AUG ,2006.
© COPYRIGHT – BY TYCO ELECTRONICS CORPORATION. ALL RIGHTS RESERVED.

LOC	DIST
DW	–

REVISIONS

P	LTR	DESCRIPTION	DATE	DWN	APVD
		SEE SHEET 1.			

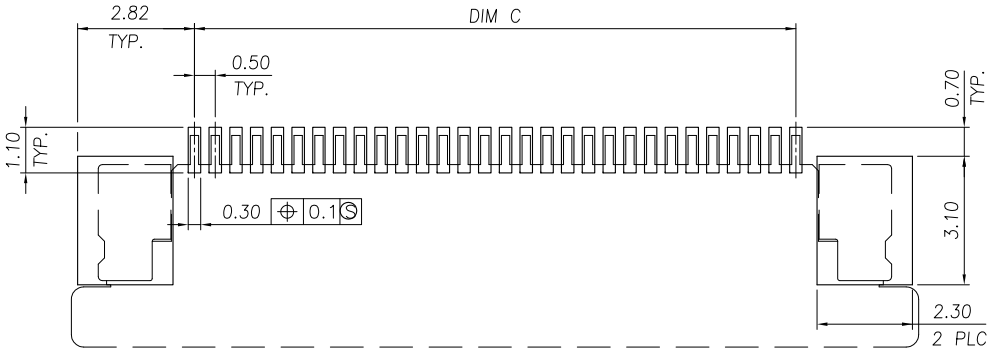

RECOMMENDED PCB DIMENSIONS DIAGRAM

TOLERANCE ± 0.05

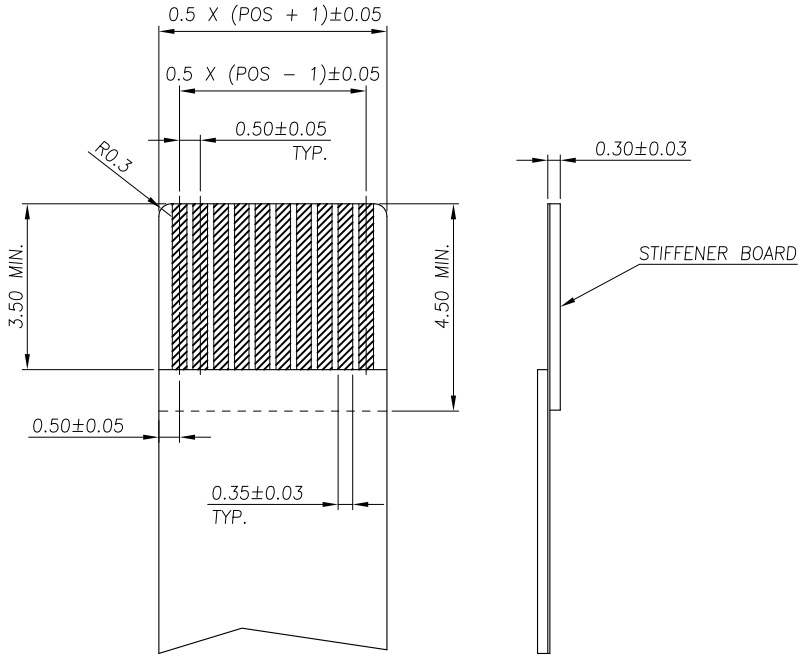

RECOMMENDED FPC DIMENSIONS DIAGRAM

TOLERANCE ± 0.05

THIS DRAWING IS A CONTROLLED DOCUMENT.

DIMENSIONS: MM

TOLERANCES UNLESS OTHERWISE SPECIFIED:

0 PLC	± –
1 PLC	± 0.35
2 PLC	± 0.25
3 PLC	± –
4 PLC	± –
ANGLES	± 3'

MATERIAL –

FINISH –

DWN
CHK
APVD
PRODUCT SPEC –
APPLICATION SPEC –
WEIGHT –

TE Connectivity

NAME: FPC CONNECTOR, 0.5mm PITCH, BOTTOM CONTACT, SMT TYPE.

SIZE	CAGE CODE	DRAWING NO	RESTRICTED TO
A3	00779	C-1734592	–

CUSTOMER DRAWING | SCALE – | SHEET 2 OF 3 | REV C

AMP 1470-19 REV 31MAR2000

THIS DRAWING IS UNPUBLISHED. RELEASED FOR PUBLICATION AUG ,2006.
© COPYRIGHT – BY TYCO ELECTRONICS CORPORATION. ALL RIGHTS RESERVED.

LOC	DIST
DW	–

REVISIONS

P	LTR	DESCRIPTION	DATE	DWN	APVD
		SEE SHEET 1.			

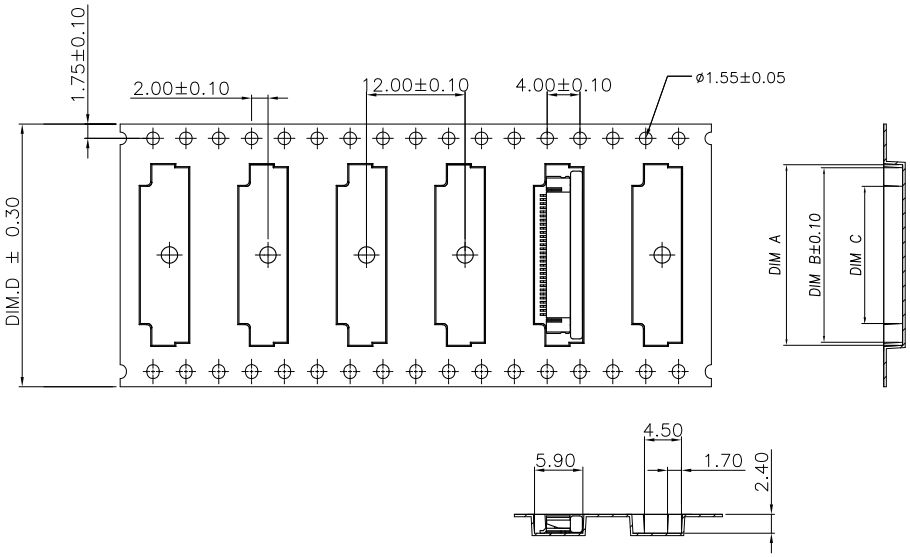

APQ (PCS/CARTON)	PPQ (PCS/REEL)	D	C	B	A	POS.
12000	2000	44.00	26.70	30.55	31.50	50
		44.00	26.20	30.05	31.00	49
		44.00	25.70	29.55	30.50	48
		44.00	25.20	29.05	30.00	47
		44.00	24.70	28.55	29.50	46
		44.00	24.20	28.05	29.00	45
		44.00	23.70	27.55	28.50	44
		44.00	23.20	27.05	28.00	43
		44.00	22.70	26.55	27.50	42
		44.00	22.20	26.05	27.00	41
		44.00	21.70	25.55	26.50	40
		44.00	21.20	25.05	26.00	39
		44.00	20.70	24.55	25.50	38
		44.00	20.20	24.05	25.00	37
		44.00	19.70	23.55	24.50	36
		44.00	19.20	23.05	24.00	35
		44.00	18.70	22.55	23.50	34
		44.00	18.20	22.05	23.00	33
		44.00	17.70	21.55	22.50	32
		44.00	17.20	21.05	22.00	31
16000		32.00	16.70	20.55	21.50	30
		32.00	16.20	20.05	21.00	29
		32.00	15.70	19.55	20.50	28
		32.00	15.20	19.05	20.00	27
		32.00	14.70	18.55	19.50	26
		32.00	14.20	18.05	19.00	25
		32.00	13.70	17.55	18.50	24
		32.00	13.20	17.05	18.00	23
		32.00	12.70	16.55	17.50	22
		32.00	12.20	16.05	17.00	21
20000		24.00	11.70	15.55	16.50	20
		24.00	11.20	15.05	16.00	19
		24.00	10.70	14.55	15.50	18
		24.00	10.20	14.05	15.00	17
		24.00	9.70	13.55	14.50	16
		24.00	9.20	13.05	14.00	15
		24.00	8.70	12.55	13.50	14
		24.00	8.20	12.05	13.00	13
		24.00	7.70	11.55	12.50	12
		24.00	7.20	11.05	12.00	11
		24.00	6.70	10.55	11.50	10
		24.00	6.20	10.05	11.00	09
		24.00	5.70	9.55	10.50	08
		24.00	5.20	9.05	10.00	07
		24.00	4.70	8.55	9.50	06
		24.00	4.20	8.05	9.00	05

DIMENSIONS

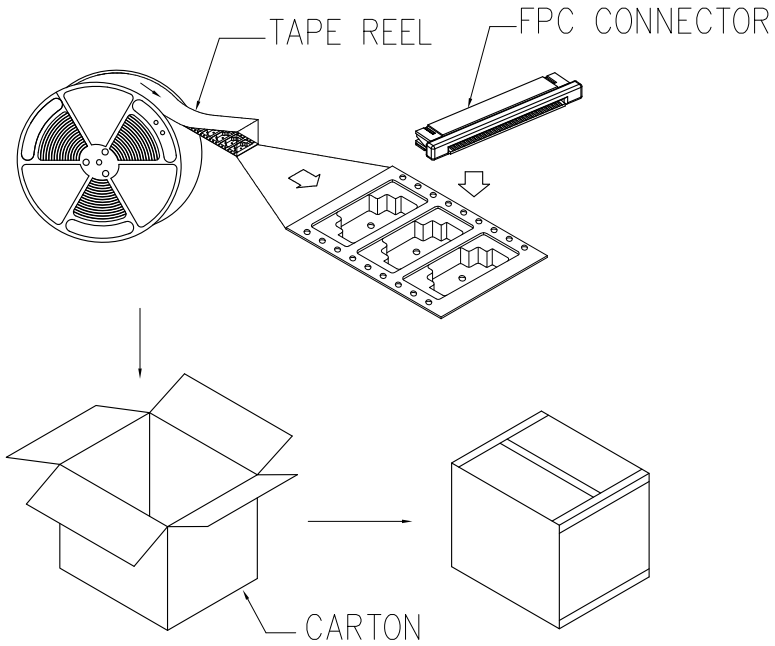

NOTE :

1. TAPE REEL:
   DIAMETER: 13", THICKNESS : 0.35±0.05mm.
2. CARTON:
   SIZE: 350mm(L)X 350mm(W)X 340mm(H).

THIS DRAWING IS A CONTROLLED DOCUMENT.

DIMENSIONS: MM

TOLERANCES UNLESS OTHERWISE SPECIFIED:
0 PLC ± –
1 PLC ± –
2 PLC ± –
3 PLC ± –
4 PLC ± –
ANGLES ± –

MATERIAL –
FINISH –

DWN
CHK
APVD
PRODUCT SPEC –
APPLICATION SPEC –
WEIGHT –

TE Connectivity

NAME
FPC CONNECTOR, 0.5mm PITCH, BOTTOM CONTACT, SMT TYPE.

SIZE	CAGE CODE	DRAWING NO	RESTRICTED TO
A3	00779	C-1734592	–

CUSTOMER DRAWING | SCALE – | SHEET 3 OF 3 | REV C

Mouser Electronics

Authorized Distributor

Click to View Pricing, Inventory, Delivery & Lifecycle Information:

TE Connectivity:

3-1734592-1