REV.	DESCRIPTION	DRAWN	DATE
A	ENGINEERING VERSION	FROS	2023/02/02
1	INITIAL RELEASE	FROS	2023/03/10

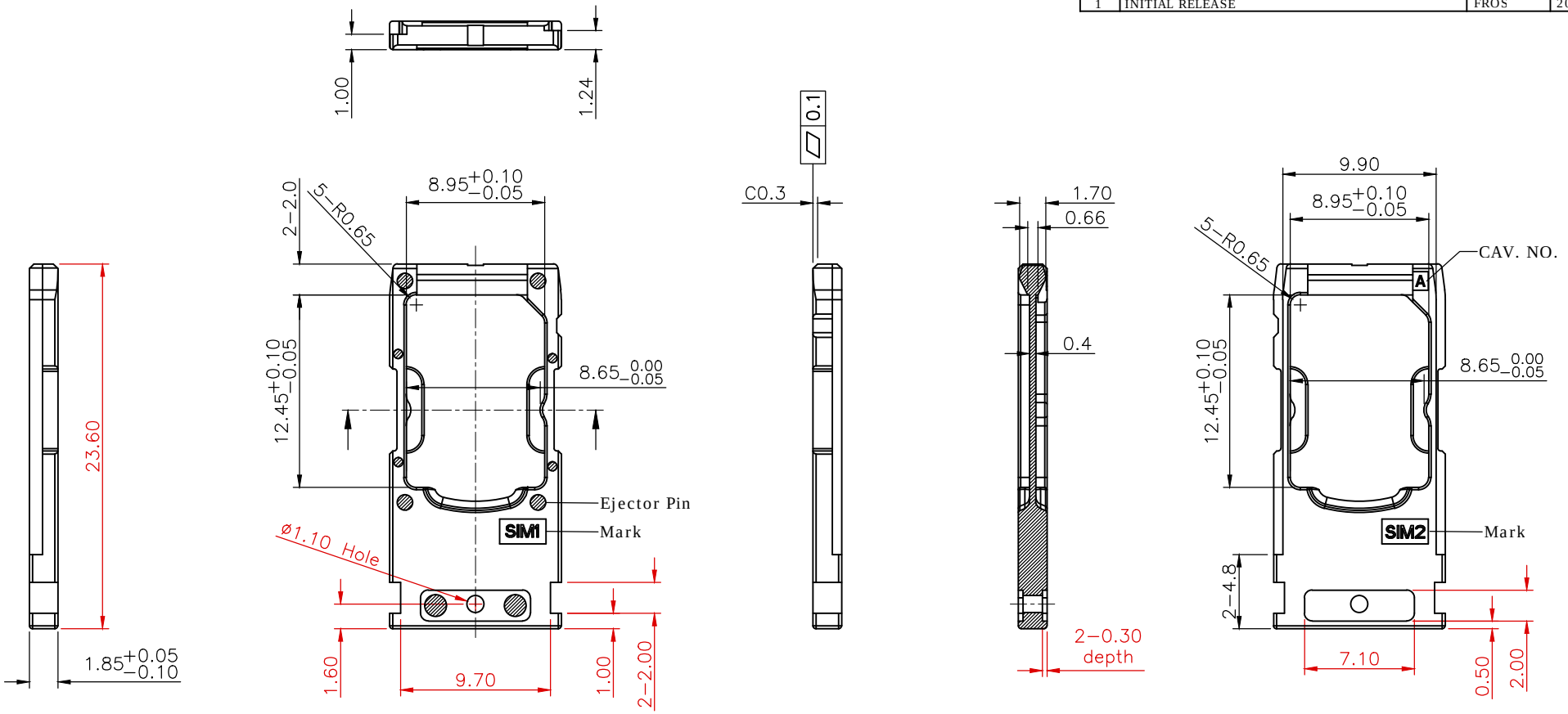

SECTION A-A

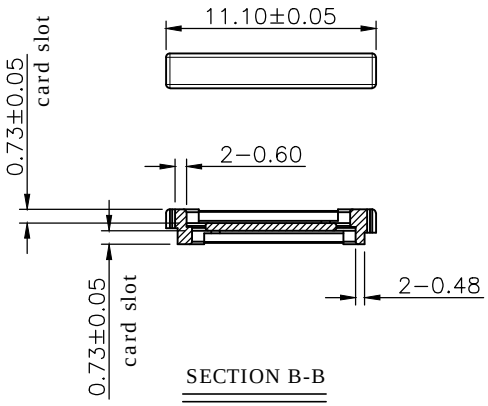

SECTION B-B

NOTE:
1. MATERIAL: PC/ABS, UL 94V-0, Black
2. RoHS + HF COMPLIANT

UNLESS OTHERWISE SPECIFIED TOLERANCE			
UNIT: mm	DECIMAL	LINEAR	ANGLES
	X.	±0.50	±5°
	X.X	±0.25	±3°
	X.XX	±0.12	±1°

ATTEND
www.attend.com.tw

DRAWN	Fros	2021/08/10	DRAWN NAME: Card Tray, Used for 115U-B100, PC+ABS, Black, Bag, 23.6L
CHECKED	Tim	2021/08/10	
APPROVED	Ken	2021/08/10	PRODUCT NO. 115U-T005
SCALE 2.5/1	SHEET 1/1	SIZE A4	FILE NAME 115U-T005_B_1