REV.	DESCRIPTION	DRAWN	DATE
1	INITIAL RELEASE	TIM	2023/05/18

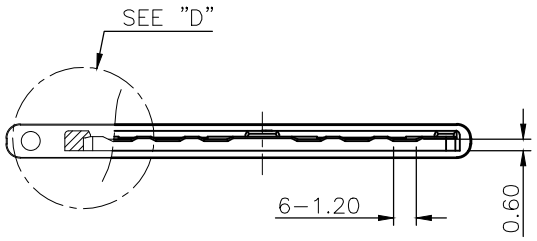

SECTION C-C

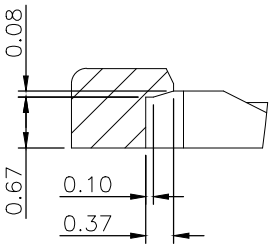

DETAIL D
Scale 10/1

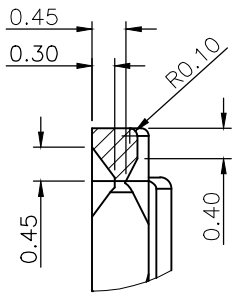

DETAIL B
Scale 10/1

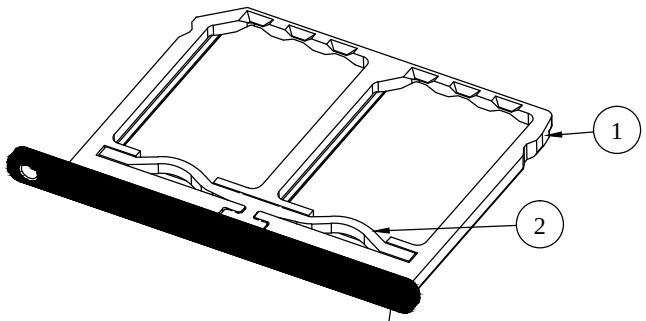

Black Panel

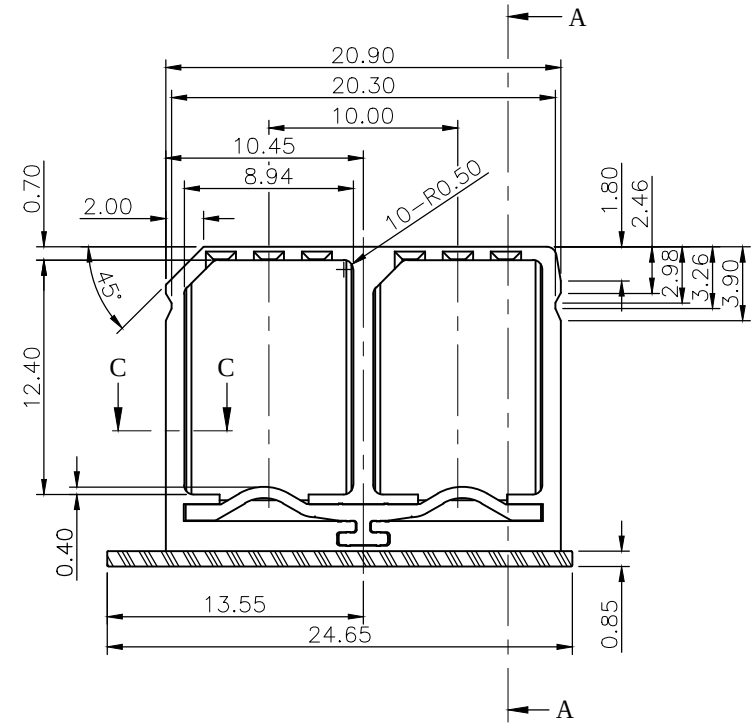

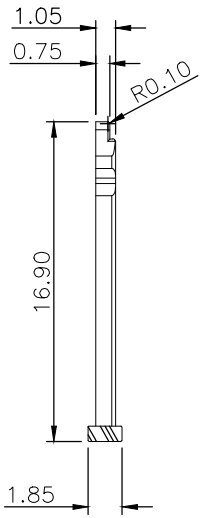

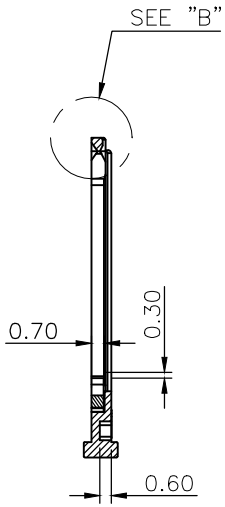

SECTION A-A

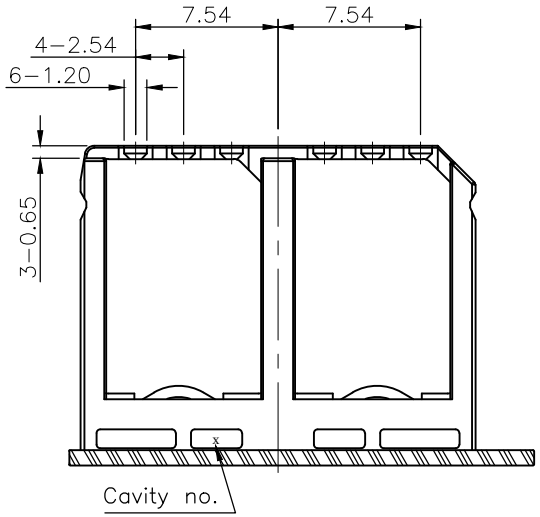

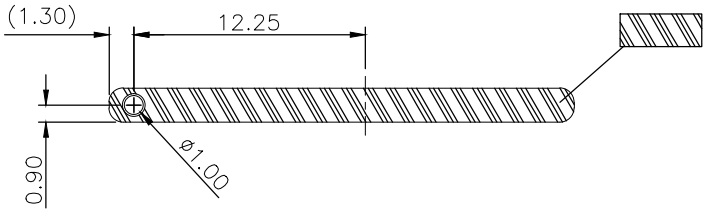

Paint: Black

NO.	PART NAME	DESCRIPTION
2	Card Clip	Nylon
1	Tray	Stainless steel

UNLESS OTHERWISE SPECIFIED TOLERANCE

UNIT:	DECIMAL	LINEAR	ANGLES
mm	X.	±0.50	±5°
	X.X	±0.25	±3°
	X.XX	±0.12	±1°

ATTEND

www.attend.com.tw

DRAWN	Tim	2023/05/18
CHECKED	Fros	2023/05/18
APPROVED	Ken	2023/05/18

DRAWN NAME: Nano SIM Tray, Dual Card, SUS316 16.9mm, Reel, With Card Clip, Black Panel

PRODUCT NO.	115S-BT02A
FILE NAME	115S-BT02A_B_1

SCALE	SHEET	SIZE
2.5	1/1	A4