aimtec
Your Power Partner

Not Recommended For New Design

Series AM1/4L-NZ

1/4 Watt | DC-DC Converter

FEATURES:

- RoHS Compliant
- SMD Package
- Low ripple and noise
- High efficiency up to 64%
- Operating temperature -40ºC to + 85ºC
- Input/Output Isolation 3000VDC
- Pin compatible with multiple manufacturers
- UL94-VO Package

RoHS

Models
Single output

Model	Input Voltage (V)	Output Voltage (V)	Output Current max (mA)	Isolation (VDC)	Efficiency (%)
AM1/4L-0505SH30-NZ	4.5-5.5	5	50	3000	64

NOTE*: Add suffix “TR” to a part number when ordering in tape and reel package.
NOTE: The model AM1/4-0505SH30-NZ is not recommended for new designs; For new design, please refer to AM1LS-0505SH30VZ.**

Input Specifications

Parameters	Nominal	Typical	Maximum	Units
Voltage range	5	4.5-5.5		VDC
Filter	Capacitor			

Isolation Specifications

Parameters	Conditions	Typical	Rated	Units
Tested I/O voltage	60 sec		3000	VDC
Resistance		> 1000		MOhm
Capacitance		60		pF

Output Specifications

Parameters	Conditions	Typical	Maximum	Units
Voltage accuracy	See the tolerance graph	±5		%
Line voltage regulation	For 1% change of Vin	±1.2		%
Load voltage regulation	Load 10 – 100%	10		%
Temperature coefficient		±0.03		%/ºC
Ripple & Noise	At 20MHz Bandwidth	75		mV p-p

General Specifications

Parameters	Conditions	Typical	Maximum	Units
Switching frequency	100% load	100		KHz
Short circuit protection	Momentary (1sec)			
Operating temperature	Without derating	-40 to +85		ºC
Storage temperature		-55 to +125		ºC
Cooling	Free air convection			
Humidity			95	%
Case material	Plastic UL94-VO			
Weight		1.5		g
Dimensions (L x W x H)	Single	0.60 x 0.44 x 0.26 inch 15.24 x 11.20 x 6.70 mm		
MTBF	>3 500 000hrs (MIL-HDBK -217F, Ground Benign, t=+25ºC)			
Max Case Temperature			95	ºC

NOTE: All specifications in this datasheet are measured at an ambient temperature of 25°C, humidity<75%, nominal input voltage and at rated output load unless otherwise specified

Pin Out Specifications

Pin	Single
1	- V Input
2	+ V Input
3	N.C.
5	-V Output
6	N.C.
7	N.C.
8	+V Output
10	N.C.
11	N.C.
12	N.C.

Typical characteristics

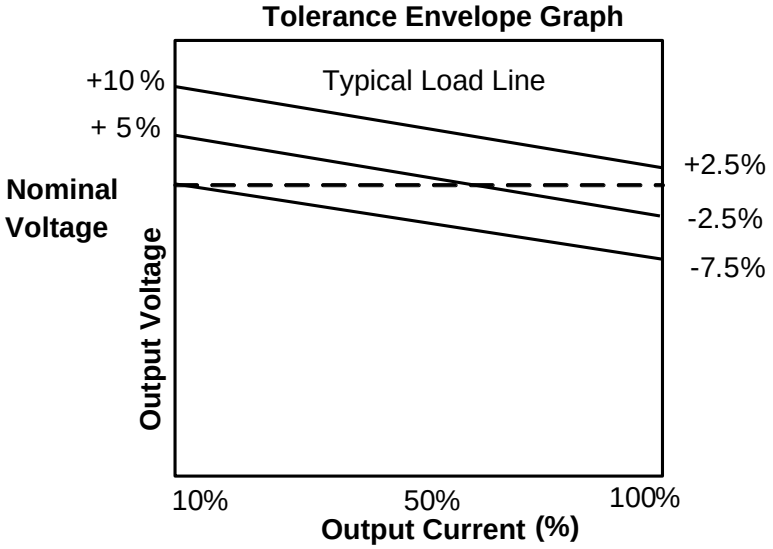

Dimensions

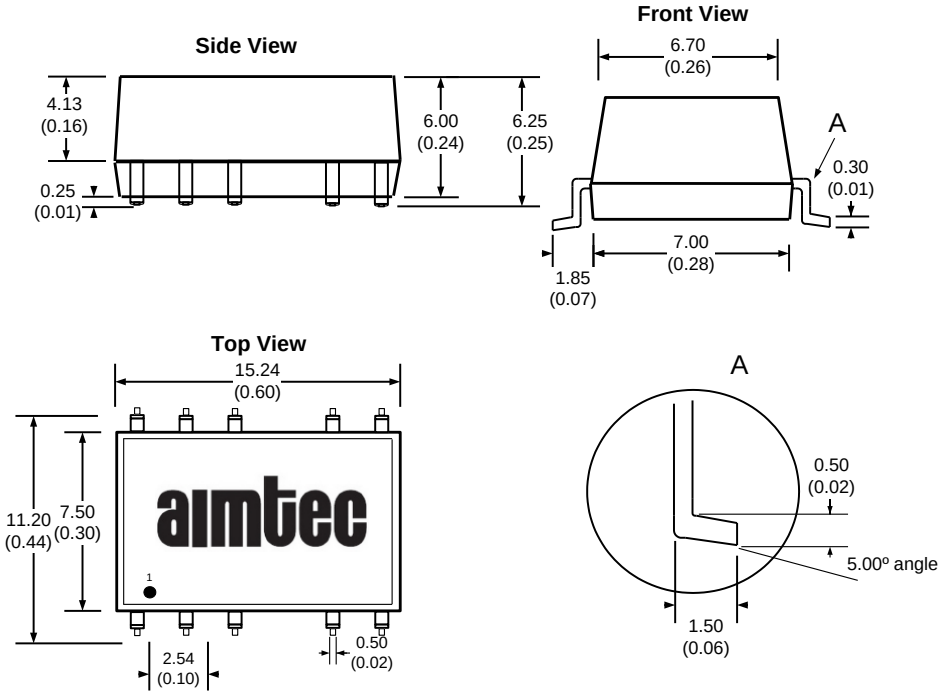

All dimensions are in mm (inch)
All Pins are on a 2.54mm (0.10inch) pitch
with tolerance of ±0.25mm (0.01inch)

NOTE: 1. Datasheets are updated as needed and as such, specifications are subject to change without notice. Once printed or downloaded, datasheets are no longer controlled by Aimtec; refer to www.aimtec.com for the most current product specifications. **2.** Product labels shown, including safety agency certifications on labels, may vary based on the date manufactured. **3.** Mechanical drawings and specifications are for reference only. **4.** All specifications are measured at an ambient temperature of 25°C, humidity<75%, nominal input voltage and at rated output load unless otherwise specified. **5.** Aimtec may not have conducted destructive testing or chemical analysis on all internal components and chemicals at the time of publishing this document. CAS numbers and other limited information are considered proprietary and may not be available for release. **6.** This product is not designed for use in critical life support systems, equipment used in hazardous environments, nuclear control systems or other such applications which necessitate specific safety and regulatory standards other the ones listed in this datasheet. **7.** Warranty is in accordance with Aimtec's standard Terms of Sale available at www.aimtec.com.