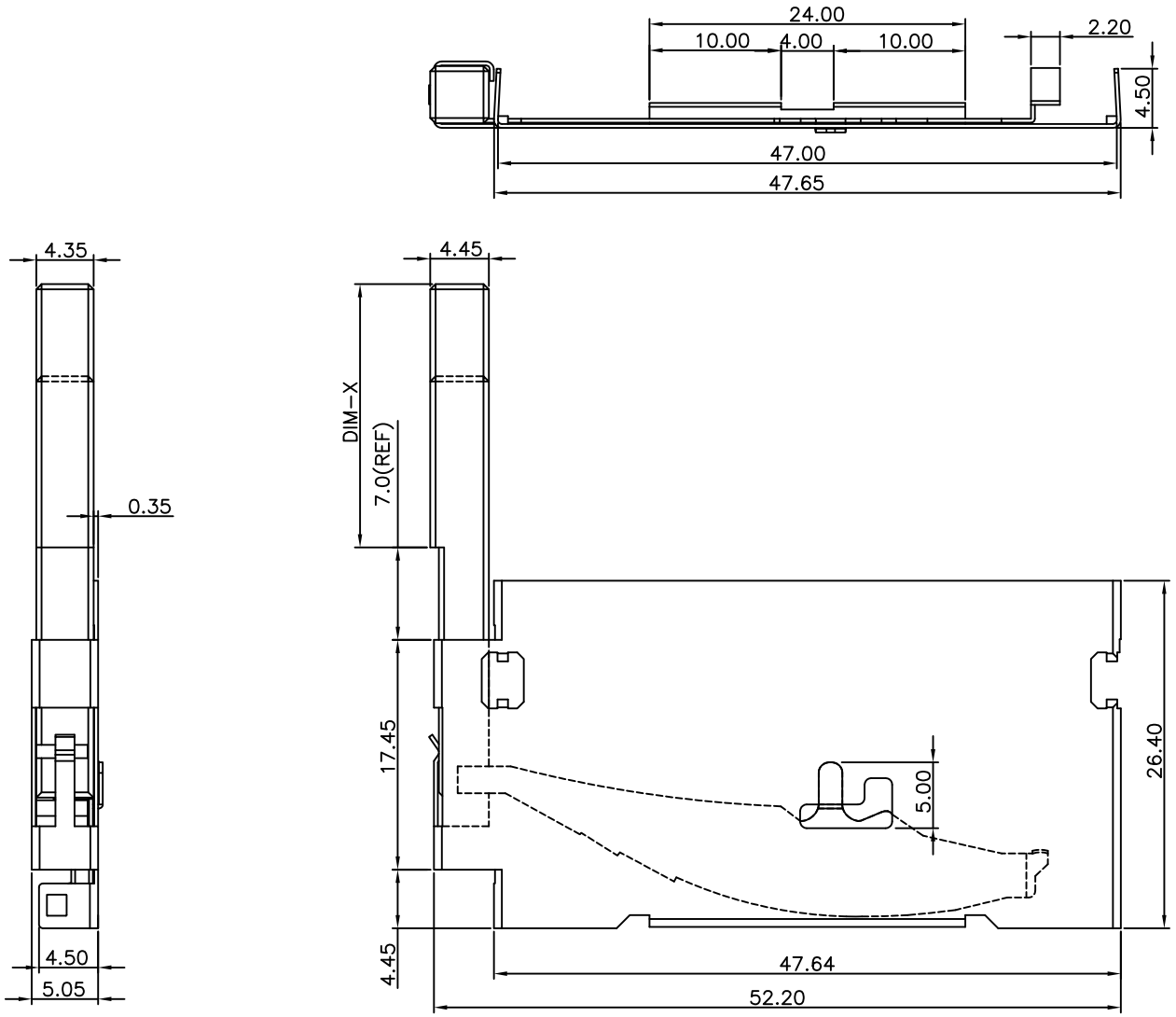

MATERIAL
Push Button: Thermal Plastic
UL94V-0 Color:Black
Cover: Stainless Steel
Pivot Shell: Stainless Steel
Rated Voltage: 35V/AC Max

101C-E S X 0-R
1 2 3 4

1.Type
E:Ejector

2.Ejector Type
S:Straight

3.Ejector Length
A:15mm
B:20mm
C:22mm

4.ROHS

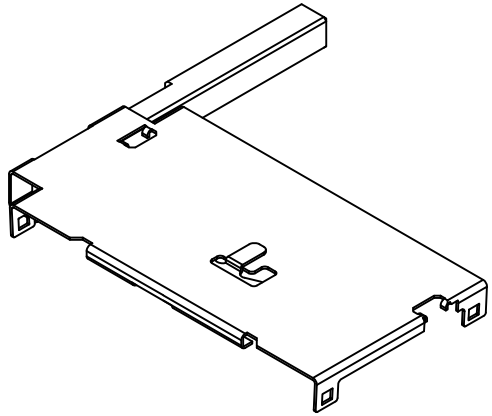

REV.	DESCRIPTION	DATE	REV.	DESCRIPTION	DATE
3	Revise:				
2	Revise:				
1	Revise:				

UNLESS OTHERWISE SPECIFIED TOLERANCE

ANGLES	ANG.	±5°
LINEAR	0.	±0.3
	0.0	±0.25
	0.00	±0.20
SCALE	AS SHOWED	UNIT: mm
DRAWN	Willis	2012/08/03
CHECKED	Angel	2012/08/03
APPROVED	Ken	2012/08/03

SIZE A4 REV. 1.0

ATTEND
www.attend.com.tw

DRAWN NAME: CF Socket Ejector With Shell

PRODUCT NO. 101C-ESX0-R

FILE NAME 101C-ESX0-R_B_1