9001-A Series

DIN41612 Q Type Female

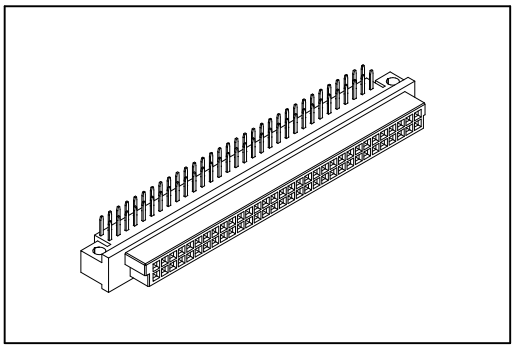

Material:

Housing: Thermoplastic Polyester Glass Filled UL94V-0.
Contacts: Copper Alloy.

Electrical Characteristics:

Current Rating: 2 A.
Dielectric Withstanding Voltage: AC 1000V.
Insulator Resistance: 1000MΩ min.
Contact Resistance: 20mΩ max.
Operating Temperature: -55°C ~+125°C.

Features:

* Mates with Male 2Row
  9001-3364,3332 Q Type.
  9001-3164,3132 B Type.

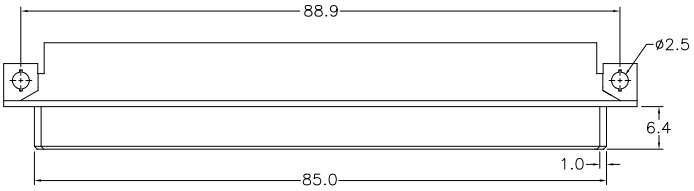

Dip Type

Press Fit Type

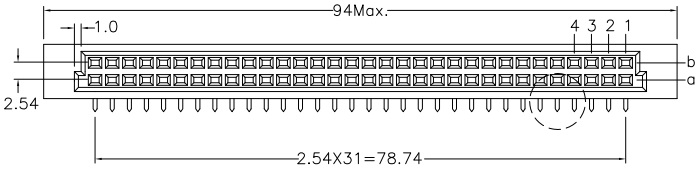

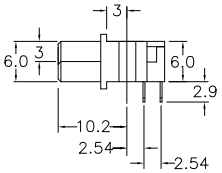

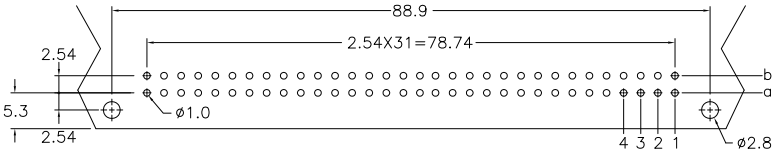

P.C. Board Layout

Pitch	Position	Rows with Contacts	Contact Arrange
2.54mm	64	a b	b a 4 3 2 1
	32	a –	b a 4 3 2 1
5.08mm	32	a b	b a 4 3 2 1
	16	a –	b a 4 3 2 1

Ordering information

9001-A	3	4	64	1	C	00	P	L1	A
Series	3: 2.54mm 4: 5.08mm	4: Female	Position	1: Dip Length	C: Selective Gold Plated	00: G/F	Blank: Dip P: Press Fit	Blank: W/O Lock L1: With Lock	A: Tray Package

See Page CA03