XG1-0008-01

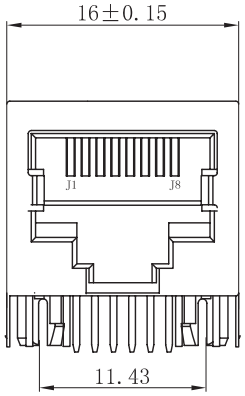

PC Board Layout

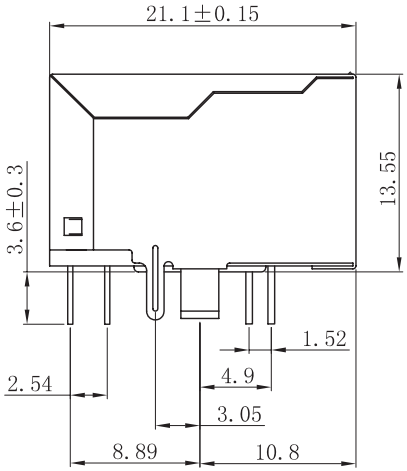

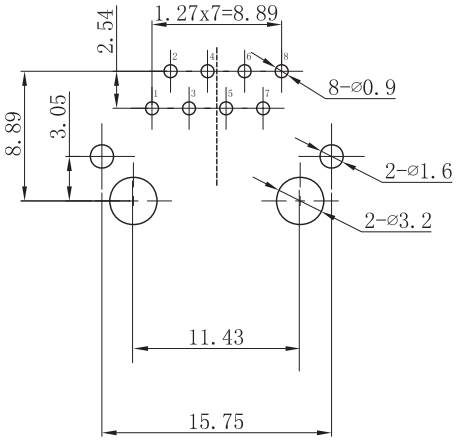

SPECIFICATIONS

ELECTRICAL

CURRENT RATING: 1.5AMPS
VOLTAGE RATING: 125V AC
INSULATION RESISTANCE: ≥500MΩ
WITHSTANDING VOLTAGE: AC 1000V RMS 50Hz or 60Hz 1Min
CONTACT RESISTANCE: ≤30mΩ

MECHANICAL

MATING FORCE: 5-25N
RETENTION STRENGTH: ≥76N
DURABILITY: ≥750 TIMES

MATERIAL
HOUSING: PBT FILLED WITH FIBERGLASS
INSERT MATERIAL: PBT FILLED WITH FIBERGLASS
SHIELDING:0.2mm THICKNESS COPPER ALLOY WITH NICKEL PLATED
CONTACT:PHOSPHOR BRONZE,HARD GOLD PLATED OVER TIN
GOLD PLATING:<3μ″INCH,3μ″INCH,6μ″INCH,15μ″INCH,
30μ″INCH,50μ″INCH

WORKING TEMPERATURE: -40℃ ～ +70℃

TOLERANCE RATE			
dimension	A	B	C
0～4	0.05	0.10	0.20
4～16	0.08	0.15	0.30
16～64	0.12	0.25	0.50
64～250	0.25	0.40	0.80

Order Information:
SK02- 11 1 009 NL -(Y/N)
A B C D E F

A: It stands for the RJ45 designer:Such as SK or Other,01or 02 stands for as followig:01=Tab up，02=Tab down
B: The parts are single or multi-ports: such as SK01-11xxxx, it means 1x1 single port, SK01-21xxxx, means 2x1 or 1x2,it is a dual ports RJ45 filtered connector.
C: Tells it is a LEDs version or not, "1" means with LEDs, "0"or else there is without LEDs.
D: It stands for the Parts's series No.
E: NL=RoHS Complaint.
F: Contact Plating Code: Normal type is No Mark, it stands the Contact Area of Contact Pin is 6U″ Gold Plating. More than 6U″ need Mark 15 or 30 or 50.etc.

old No.	
original No.	
date	sign

Change mark	Qty	Change number	Sign	Date
Design				
Check				
Craft				
Standard				
Approval				

PART NO:
SK02-111009NL

PhaseMeight			Quality	Proportion
A				3:1
Page 1		Total 1		

SAK ELECTRONICS

MODULAR JACK

XG1-0008-01

XG1-0008-01

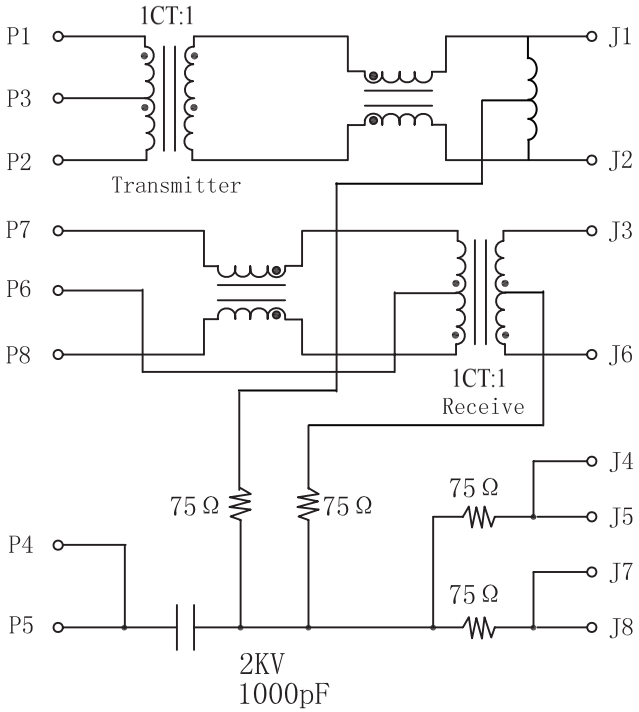

ELECTRICAL SPECIFICATIONS @ 25℃ unless otherwise noted:

Insertion Loss:	1-65MHZ	-1.0dB MAX
Return Loss:	1-10MHZ	-20.0dB MIN
	10-30MHZ	-16.0dB MIN
	30-60MHZ	-12.0dB MIN
	60-80MHZ	-10.0dB MIN
Crosstalk:	1-30MHZ	-40.0dB MIN
	30-60MHZ	-35.0dB MIN
	60-100MHZ	-30.0dB MIN
CMR:	1-50MHZ	-30.0dB MIN
	50-150MHZ	-20.0dB MIN

Hipot:1500V AC 6S 1mA

OCL:350uH MIN @ 100KHZ 100mV 8mA DC

Change mark	Qty	Change number	Sign	Date
Design				
Check				
Craft				
Standard				
Approval				

PART NO:

SK02-110009NL

PhaseMeight			Quality	Proportion
A				3:1
Page 1		Total 1		

SAK ELECTRONICS

MODULAR JACK

XG1-0008-01

old No.	
original No.	
date	sign